ROHS

REV.	ECN NO.	DESCRIPTION	DRAW	DATE

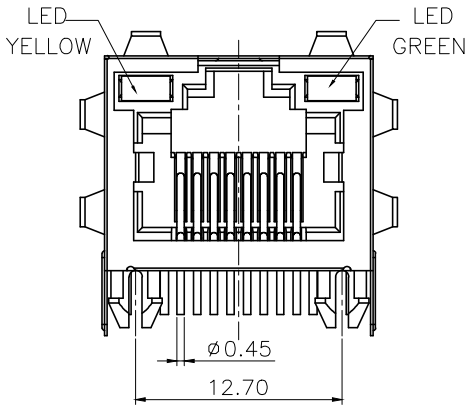

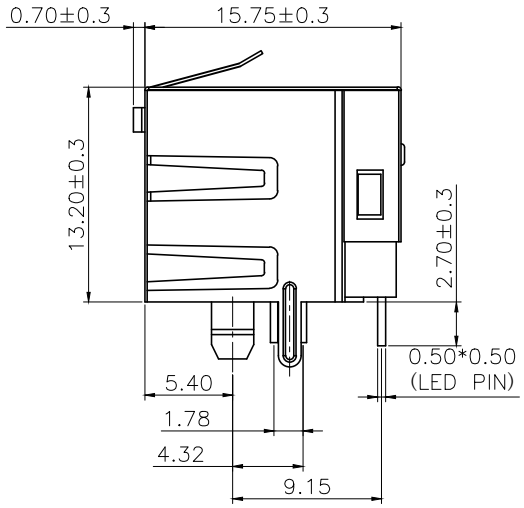

SPECIFICATION:
Electrical:
Current Rating:1.5Amp max @25
Voltage Rating:150VAC max
Insulation Resistance:500 megohms min
Contact Resistance:20 milliohms max(Initial)
Withstanding Voltage:1000 VAC
Mechanical:
Durabillity:750 Cycles
Operating Temperature:−40 ~+70
Storage Temperature:−50 ~+75
Contact Normal Force:100g Minimum
Material:
Housing: Thermoplastic UL94V−0,PBT
Shield:0.15mm Thickness Stainless Steel SUS304−1/2H Plated Ni
Contact:0.45mm Dia Phosphor Bronze
Plated Gold Over Ni
For wave Soldering Temperature: 260+/−5 ,5sec/95%Areabe covered
Withstand Temperature: 230+/−5 ,5sec No stick tin melting phenomenon

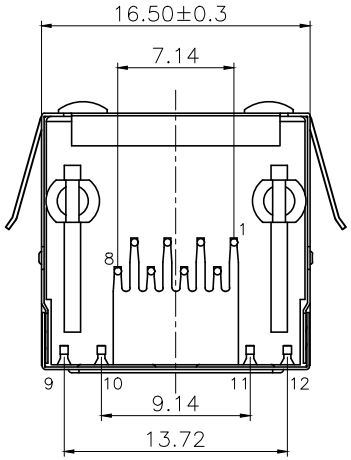

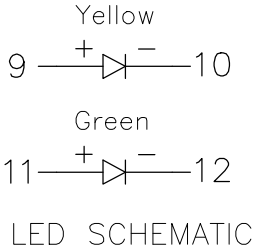

LED SCHEMATIC

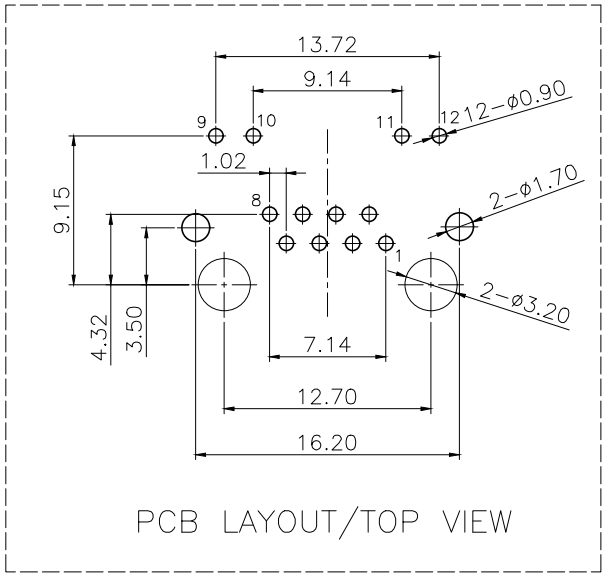

PCB LAYOUT/TOP VIEW

COSTOMER DRAWING			
DRAWING			
CHECKED			
APPROVED			
TOLERANCES ARE			
30-150	±0.35	ANGLE	
10-30	±0.2		
5-10	±0.15	±3°	
0-5	±0.1		

LAILAN 深圳市莱联电子有限公司
SHENZHEN LAILIAN ELECTRONICS CO.,LTD

TITLE	RJ45 8P8C带壳带弹左黄右绿	REV.	A
PART NO.	LAIL-RJ45-LED2-BY-15-WC	UNITS	mm
DWG. NO.		Projection	