# SPECIFICATION FOR APPROVAL
# 规格承认书

Product Name 产品名称　　SEAM SMD3225 QUARTZ CRYSTAL

Part Description 产品型号：SEAM SMD3225 24MHZ 8PF ±10PPM ROHS

Porcelain gold Part No 物料编码 ：　83FA024000-08301000

Date 日期：　　2026-07-14

| CUSTOMER APPROVED BY 顾客承认章 |
| --- |
| |

REDACTOR：　　APPROVER：

姜之恒　　吴子健

瓷金科技（登封）有限公司
CiJin KeJi(Deng Feng) Technology Co., Ltd.
公司地址：河南省郑州市登封市中岳街道先进制造业开发区创新创业科技园 7 号楼 4 层
电话：0755-21380851　　传真：0755-21380851
Tel:　0755-21380851　　Fax：0755-21380851
E-mail: 646443499@qq.com

## CONTENT 目录

ITEM项目 Page页

1．Electrical Specification 电气性能 ----------02
2．Solder Dimension And Pattern 焊接模型尺寸图----------03
3．Equivalent Circuit：等效电路图----------03
4．Structure drawing 结构图----------03
5．Reliability Specification 可靠性说明----- ----- ----------04
6．Marking specification 标识说明---------- 05
7．Type & Reel 编带类型及卷盘----------05
8．Packing Specification 包装说明----------07

**1.Electrical characteristics电气性能**

| Items 项目 | Symbol 符号 | Specification 规格说明 | | | Unit 单位 | Notes |
|---|---|---|---|---|---|---|
| | | Min 最小 | Typ 标准 | Max 最大 | | |
| Model No 型号 | | SEAM SMD 3225 | | | | |
| Blank Cutting Mode 晶片切型 | | AT FUND. | | | | |
| Nominal Frequency 标称频率 | FL | 24.000000 | | | MHz | |
| Oscillation Mode 振荡模式 | | ■Fundamental □3rd | | | | |
| Load Capacitance 负载电容 | CL | | 8 | | pF | |
| Frequency Stability 频率公差 | | -10ppm | | 10ppm | ppm | |
| Operating Temperature 工作温度 | Topr | -20 | | 70 | ℃ | ±10PPM |
| Storage Temperatur 储存温度 | Tstg | -40 | ~ | 85 | ℃ | |
| Drive Level 驱动功率 | DL | | 100 | | uW | |
| Effective Resistance RR 等效电阻 | Rr | - | - | 30 | Ω | - |
| Shunt Capacitance C0 并联电容 | C0 | - | - | 7 | pF | - |
| Motional Capacitance C1 动态电容 | C1 | - | - | NA | fF | - |
| Insulation Resistance 绝缘电阻 | Rins | 500 | - | - | MΩ | at DC 100V |
| Aging:老化率 | | -6 | | 0 | ppm | Per year |
| Weight 重量 | | | 0.018 | | g | |

**Remark备注:**

**Measure equipment测量设备 ：**

Electrical characteristics measured by S&A 250B or equivalent.

电气性能测量为S&A 250B或相当设备。

**Hermetically密封性 ：**

**Fine Leak细漏:** Helium Bombing 4kg/cm$^2$ for 1 Hour,Leak ate Less Than $1\times10^{-9}$ atm.cc/sec

氦气加压4kg/cm$^2$1小时，氦质谱检漏仪检测泄漏小于$1\times10^{-9}$ atm.cc/sec

**2. Solder Dimension And Pattern封装模型尺寸图：**

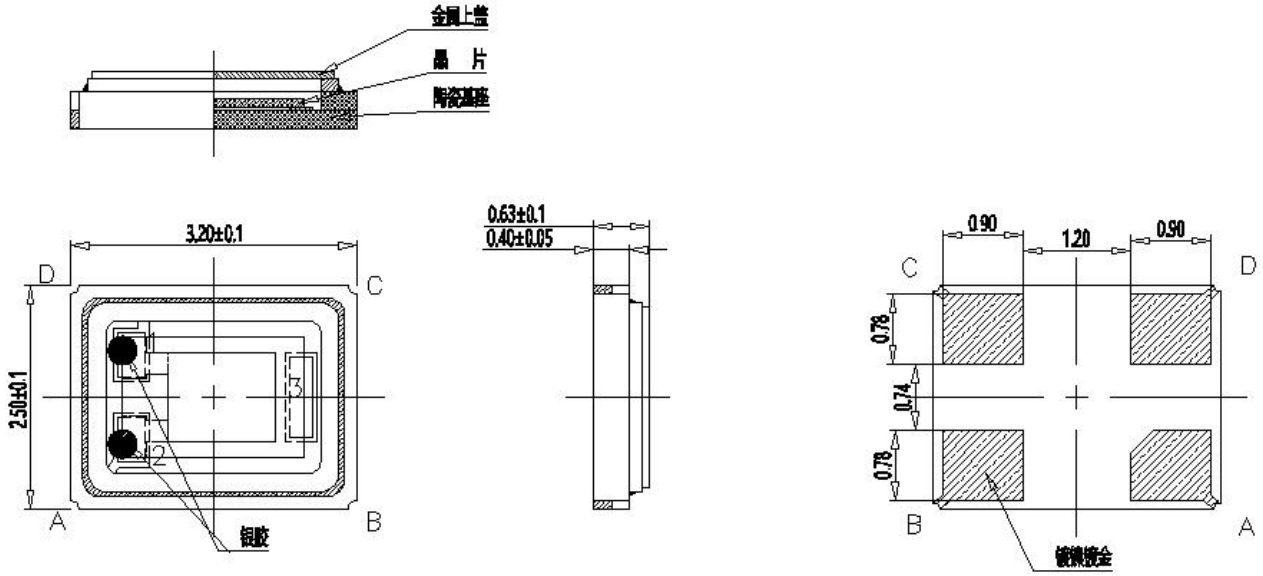


**3、 Equivalent Circuit等效电路图：**

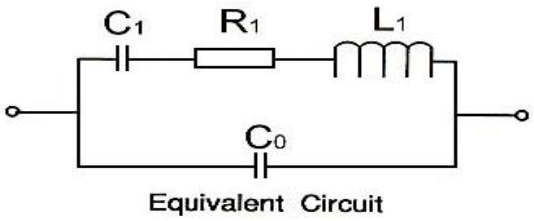


**4. Structure drawing结构图：**

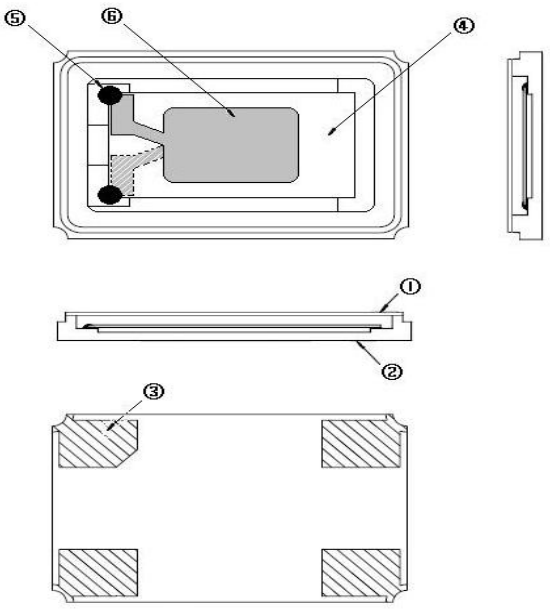

| NO | COMPONENTS<br>构成 | MATERIALS<br>原料 | QTY<br>数量 | FINISH / SPECIFICATIONS<br>结束/说明 |
|---|---|---|---|---|
| 1 | Cap上盖 | Metal（Fe）金属 | 1 | - |
| 2 | Base基座 | Ceramic陶瓷制品 | 1 | Color black炭黑色 |
| 3 | PAD焊盘 | Au金 | 4 | Tungsten metalize钨合金<br>+ Ni plating镍电镀<br>+ Au plating金电镀 |
| 4 | Crystal Blank石英晶片 | $SiO_2$二氧化硅 | 1 | - |
| 5 | Conductive Adhesive导电粘合剂 | Ag银 | 3 | Silicone硅树脂 |
| 6 | Electrode电极 | Ag银 | 1 | - |

**5. Reliability Specification可靠性说明**

| | Item 项目 | Condition 条件 | Standard 标准 |
|---|---|---|---|
| **1.** | Drop characteristics<br>跌落特性 | Free drop from 100cm height on a hard wooden board for 3 times. (Board is thickness more than 30 mm.) | Frequency change:≤±5ppm<br>Rr as specification |
| **2** | Mechanical shock<br>机械冲击 | Device are shocked to half sine wave (1000g) three mutually perpendicular axes each 3 times | Frequency change:≤±5ppm<br>Rr as specification |
| **3.** | Shake characteristics<br>震动特性 | Shake frequency 10~55Hz, cyc1~2 minutes, swing 1.5mm, direction x/y/z, all 30 minutes, test after 1 hours. | Frequency change:≤±5ppm<br>Rr as specification |
| **4.** | Humidity characteristics<br>湿度特性 | +85±2℃ & 80%~85% R.H. 168 hours | Frequency change:≤±5ppm<br>Rr as specification |
| **5.** | Low temperature characteristics<br>低温特性 | -40±2℃, 168 hours, put in room temperature, test after 1 hours. | Frequency change:≤±5ppm<br>Rr as specification |
| **6.** | High temperature characteristics<br>高温特性 | +85±2℃, 168 hours, put in room temperature, test after 1 hours. | Frequency change:≤±5ppm<br>Rr as specification |
| **7.** | Temperature cycling 温度循环 | -30±3℃/30±3 min~+85±2℃/30±3min,<br>5 cycles | Frequency change:≤±5ppm<br>Rr as specification |
| **8.** | Refluence examination 回流焊特性 | 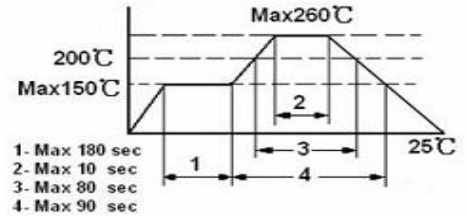 | Frequency change:≤±5ppm<br>Rr as specification |

**6. Marking specification标识说明**




**7. Type & Reel编带类型及卷盘**

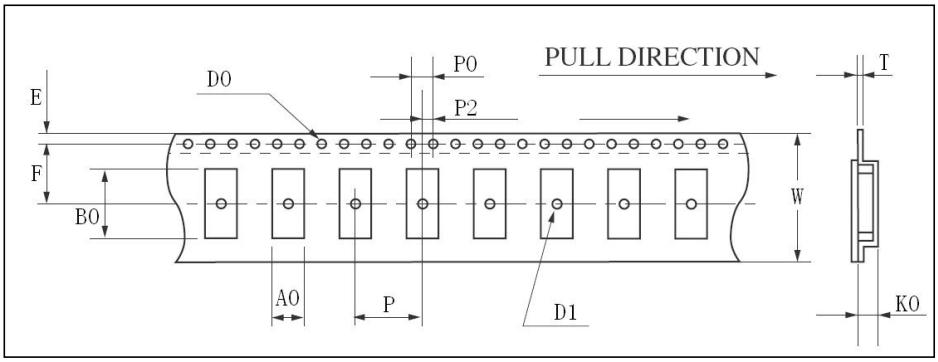


| | 7040 | 5032 | 3225 | 2520 | 2016 |
|---|---|---|---|---|---|
| W | 16.00±0.30 | 12.00±0.05 | 8.00±0.05 | 8.00±0.05 | 8.00±0.05 |
| E | 1.75±0.10 | 1.75±0.10 | 1.75±0.05 | 1.75±0.05 | 1.75±0.05 |
| F | 7.5±0.10 | 5.5±0.10 | 3.5±0.05 | 3.5±0.05 | 3.5±0.10 |
| T | 0.35±0.05 | 0.30±0.05 | 0.25±0.03 | 0.25±0.03 | 0.20±0.05 |
| P | 8.00±0.10 | 8.00±0.10 | 4.00±0.05 | 4.00±0.05 | 4.00±0.10 |
| P0 | 4.00±0.10 | 4.00±0.10 | 4.00±0.05 | 4.00±0.05 | 4.00±0.10 |
| P2 | 2.00±0.10 | 2.00±0.10 | 2.00±0.05 | 2.00±0.05 | 2.00±0.10 |
| D0 | ϕ1.50+0.10 | ϕ1.50+0.10 | ϕ1.50+0.10 | ϕ1.50+0.10 | 1.00±0.10 |
| D1 | ϕ1.50MIN | ϕ1.50MIN | ϕ1.00MIN | ϕ1.00MIN | 1.10±0.10 |
| A0 | 4.50±0.10 | 3.50±0.10 | 2.70±0.05 | 2.25±0.05 | 1.80±0.05 |
| K0 | 2.50±0.10 | 1.60±0.10 | 1.50±0.10 | 0.70±0.10 | 0.65±0.10 |
| B0 | 8.00±0.15 | 5.20±0.10 | 3.50±0.05 | 2.75±0.05 | 2.20±0.10 |

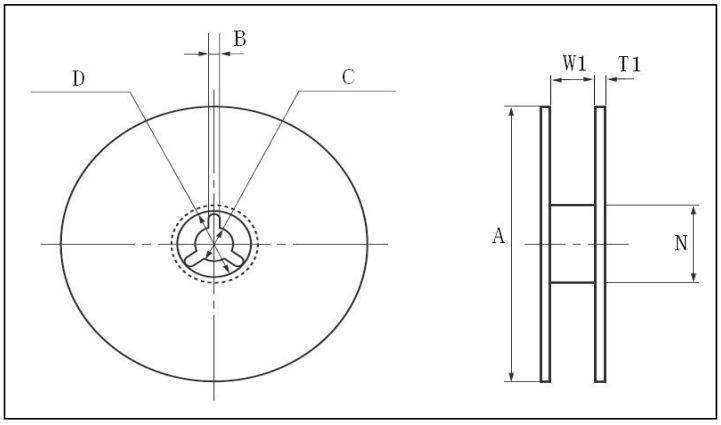


| | 7040 | 5032 | 3225 | 2520 | 2016 |
|---|---|---|---|---|---|
| A | φ330±1.0 | φ178±2.0 | φ178±2.0 | φ178±2.0 | φ178±2.0 |
| B | 2.30±0.20 | 2.00±0.50 | 2.50±0.50 | 2.50±0.50 | 2.50±0.50 |
| C | φ13.2±0.20 | φ13.2±0.20 | φ13.5±0.20 | φ13.5±0.20 | φ13.5±0.20 |
| D | φ10.7±0.20 | φ20.0±0.50 | φ56.8±0.50 | φ56.8±0.50 | φ56.8±0.50 |
| N | φ100.0±0.5 | φ60.5±1.0 | φ60.5±1.0 | φ60.5±1.0 | φ60.5±1.0 |
| W1 | 24±0.20 | 12.5±0.20 | 9.4±0.30 | 9.4±0.30 | 9.4±0.30 |
| T1 | 2.10±0.20 | 1.80±0.20 | 1.40±0.20 | 1.40±0.20 | 1.40±0.20 |

**8. Packing Specification 包装说明**

1. 每盘数量：3000PCS

每箱数量：120000PCS

