SPECIFICATION FOR APPROVAL
规格承认书

Product Name 产品名称　　SEAM SMD3225 QUARTZ CRYSTAL

Part Description 产品型号：SEAM SMD3225 24MHZ 9PF ±10PPM ROHS

Porcelain gold Part No 物料编码 ：　83FA024000-09301000

Date 日期：　　2026-07-14

CUSTOMER APPROVED BY 顾客承认章

REDACTOR：　　APPROVER：

姜之恒　　吴子健

瓷金科技（登封）有限公司
CiJin KeJi(Deng Feng) Technology Co., Ltd.
公司地址：河南省郑州市登封市中岳街道先进制造业开发区创新创业科技园 7 号楼 4 层
电话：0755-21380851　　传真：0755-21380851
Tel:　0755-21380851　　Fax：0755-21380851
E-mail: 646443499@qq.com

CONTENT 目录

ITEM项目 Page页

1．Electrical Specification 电气性能 ----------02
2．Solder Dimension And Pattern 焊接模型尺寸图----------03
3．Equivalent Circuit：等效电路图----------03
4．Structure drawing 结构图----------03
5．Reliability Specification 可靠性说明----- ----- ----------04
6．Marking specification 标识说明---------- 05
7．Type & Reel 编带类型及卷盘----------05
8．Packing Specification 包装说明----------07

1.Electrical characteristics电气性能

Items 项目	Symbol 符号	Specification 规格说明			Unit 单位	Notes
		Min 最小	Typ 标准	Max 最大		
Model No 型号		SEAM SMD 3225				
Blank Cutting Mode 晶片切型		AT FUND.				
Nominal Frequency 标称频率	FL	24.000000			MHz	
Oscillation Mode 振荡模式		■Fundamental □3rd				
Load Capacitance 负载电容	CL		9		pF	
Frequency Stability 频率公差		-10ppm		10ppm	ppm	
Operating Temperature 工作温度	Topr	-20		70	℃	±10PPM
Storage Temperatur 储存温度	Tstg	-40	~	85	℃	
Drive Level 驱动功率	DL		100		uW	
Effective Resistance RR 等效电阻	Rr	-	-	30	Ω	-
Shunt Capacitance C0 并联电容	C0	-	-	7	pF	-
Motional Capacitance C1 动态电容	C1	-	-	NA	fF	-
Insulation Resistance 绝缘电阻	Rins	500	-	-	MΩ	at DC 100V
Aging:老化率		-6		0	ppm	Per year
Weight 重量			0.018		g	

Remark备注:

Measure equipment测量设备 ：

Electrical characteristics measured by S&A 250B or equivalent.

电气性能测量为S&A 250B或相当设备。

Hermetically密封性 ：

Fine Leak细漏: Helium Bombing 4kg/cm^2 for 1 Hour,Leak ate Less Than 1×10^{-9} atm.cc/sec

氦气加压4kg/cm^{2}1小时，氦质谱检漏仪检测泄漏小于1×10^{-9} atm.cc/sec

2. Solder Dimension And Pattern封装模型尺寸图：

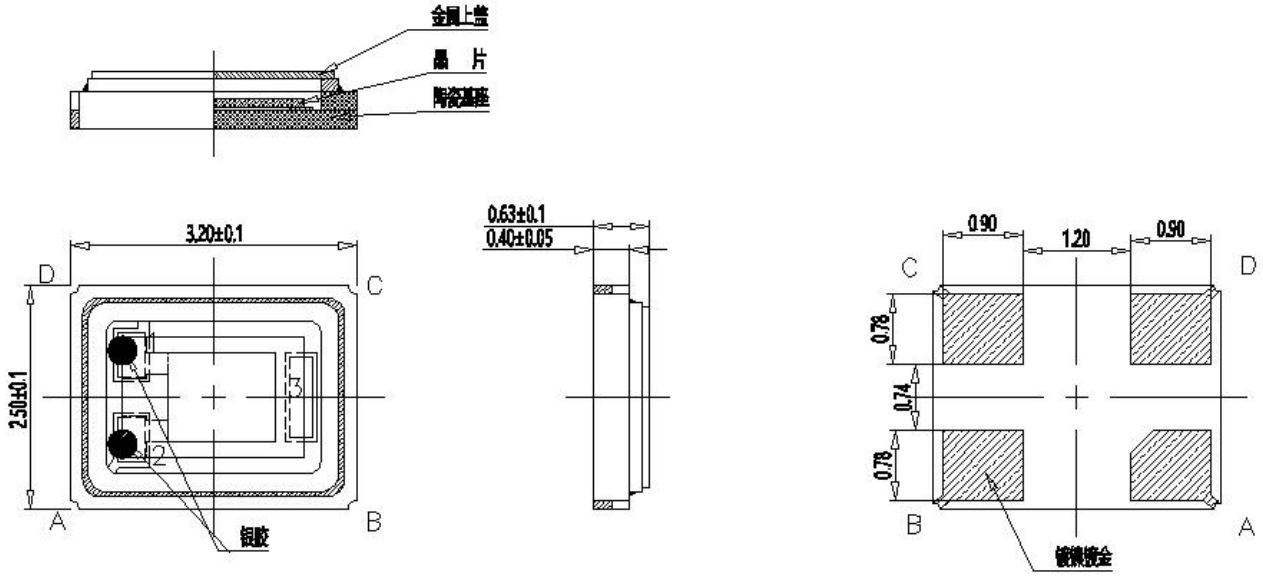

3、 Equivalent Circuit等效电路图：

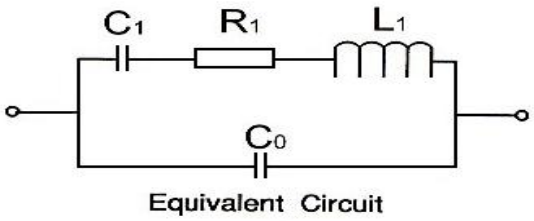

4. Structure drawing结构图：

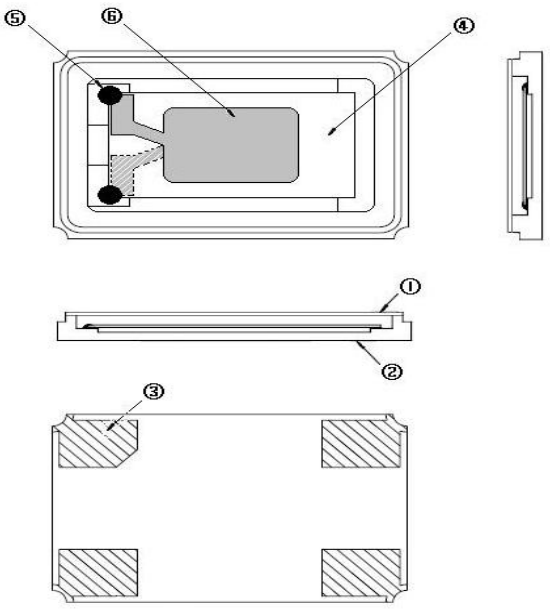

NO	COMPONENTS 构成	MATERIALS 原料	QTY 数量	FINISH / SPECIFICATIONS 结束/说明
1	Cap上盖	Metal（Fe）金属	1	-
2	Base基座	Ceramic陶瓷制品	1	Color black炭黑色
3	PAD焊盘	Au金	4	Tungsten metalize钨合金 + Ni plating镍电镀 + Au plating金电镀
4	Crystal Blank石英晶片	SiO_2二氧化硅	1	-
5	Conductive Adhesive导电粘合剂	Ag银	3	Silicone硅树脂
6	Electrode电极	Ag银	1	-

5. Reliability Specification可靠性说明

	Item 项目	Condition 条件	Standard 标准
1.	Drop characteristics 跌落特性	Free drop from 100cm height on a hard wooden board for 3 times. (Board is thickness more than 30 mm.)	Frequency change:≤±5ppm Rr as specification
2	Mechanical shock 机械冲击	Device are shocked to half sine wave (1000g) three mutually perpendicular axes each 3 times	Frequency change:≤±5ppm Rr as specification
3.	Shake characteristics 震动特性	Shake frequency 10~55Hz, cyc1~2 minutes, swing 1.5mm, direction x/y/z, all 30 minutes, test after 1 hours.	Frequency change:≤±5ppm Rr as specification
4.	Humidity characteristics 湿度特性	+85±2℃ & 80%~85% R.H. 168 hours	Frequency change:≤±5ppm Rr as specification
5.	Low temperature characteristics 低温特性	-40±2℃, 168 hours, put in room temperature, test after 1 hours.	Frequency change:≤±5ppm Rr as specification
6.	High temperature characteristics 高温特性	+85±2℃, 168 hours, put in room temperature, test after 1 hours.	Frequency change:≤±5ppm Rr as specification
7.	Temperature cycling 温度循环	-30±3℃/30±3 min~+85±2℃/30±3min, 5 cycles	Frequency change:≤±5ppm Rr as specification
8.	Refluence examination 回流焊特性	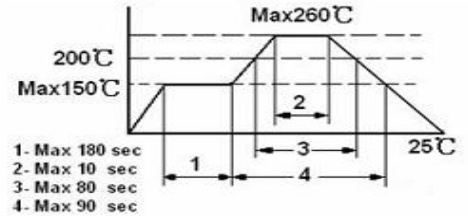	Frequency change:≤±5ppm Rr as specification

6. Marking specification标识说明



7. Type & Reel编带类型及卷盘

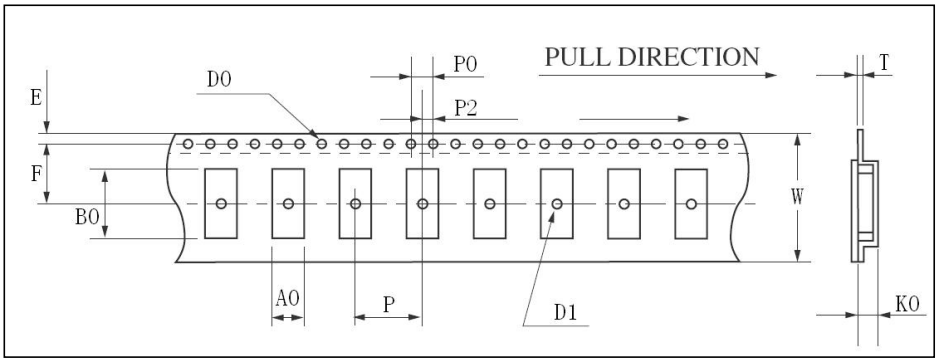

	7040	5032	3225	2520	2016
W	16.00±0.30	12.00±0.05	8.00±0.05	8.00±0.05	8.00±0.05
E	1.75±0.10	1.75±0.10	1.75±0.05	1.75±0.05	1.75±0.05
F	7.5±0.10	5.5±0.10	3.5±0.05	3.5±0.05	3.5±0.10
T	0.35±0.05	0.30±0.05	0.25±0.03	0.25±0.03	0.20±0.05
P	8.00±0.10	8.00±0.10	4.00±0.05	4.00±0.05	4.00±0.10
P0	4.00±0.10	4.00±0.10	4.00±0.05	4.00±0.05	4.00±0.10
P2	2.00±0.10	2.00±0.10	2.00±0.05	2.00±0.05	2.00±0.10
D0	ϕ1.50+0.10	ϕ1.50+0.10	ϕ1.50+0.10	ϕ1.50+0.10	1.00±0.10
D1	ϕ1.50MIN	ϕ1.50MIN	ϕ1.00MIN	ϕ1.00MIN	1.10±0.10
A0	4.50±0.10	3.50±0.10	2.70±0.05	2.25±0.05	1.80±0.05
K0	2.50±0.10	1.60±0.10	1.50±0.10	0.70±0.10	0.65±0.10
B0	8.00±0.15	5.20±0.10	3.50±0.05	2.75±0.05	2.20±0.10

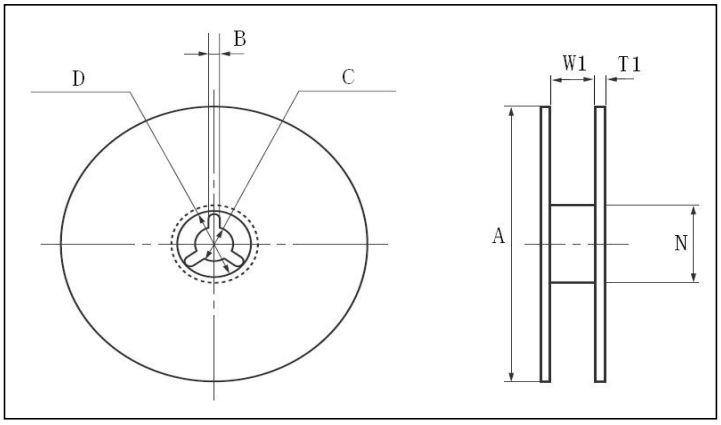

	7040	5032	3225	2520	2016
A	φ330±1.0	φ178±2.0	φ178±2.0	φ178±2.0	φ178±2.0
B	2.30±0.20	2.00±0.50	2.50±0.50	2.50±0.50	2.50±0.50
C	φ13.2±0.20	φ13.2±0.20	φ13.5±0.20	φ13.5±0.20	φ13.5±0.20
D	φ10.7±0.20	φ20.0±0.50	φ56.8±0.50	φ56.8±0.50	φ56.8±0.50
N	φ100.0±0.5	φ60.5±1.0	φ60.5±1.0	φ60.5±1.0	φ60.5±1.0
W1	24±0.20	12.5±0.20	9.4±0.30	9.4±0.30	9.4±0.30
T1	2.10±0.20	1.80±0.20	1.40±0.20	1.40±0.20	1.40±0.20

8. Packing Specification 包装说明

1. 每盘数量：3000PCS

每箱数量：120000PCS

