Product Specification

QN74LVC1G14

Single Schmitt-Trigger Inverter

DESCRIPTIONS

The QN74LVC1G14 Single Schmitt-trigger inverter is designed for 1.65V to 5.5V V_{CC} operation.

The QN74LVC1G14 device contains one inverter and performs the Boolean function $Y=\overline{A}$. The device functions as an independent inverter with Schmitt-trigger inputs, so the device has different input threshold levels for positive-going (V_{T+}) and negative going (V_{T-}) signals to provide hysteresis (ΔV_T) which makes the device tolerant to slow or noisy input signals.

This device is fully specified for partial-power-down applications using I_{off}. The I_{off} circuitry disables the outputs, preventing damaging current backflow through the device when it is powered down.

The QN74LVC1G14 is available in Green SOT23-5 and SC70-5 packages. It operates over an ambient temperature range of -40°C to +125°C.

FEATURES

- **Operating Voltage Range: 1.65V to 5.5V**
- **Low Power Consumption: 0.1μA (TYP)**
- **Operating Temperature Range: -40°C to +125°C**
- **Input Accept Voltage to 5.5V**
- **High Output Drive: ±24mA at V_{CC}=3.0V**
- **I_{off} Supports Partial-Power-Down Mode Operation**
- **ESD Protection Exceeds JESD 22**
  - **4000-V Human-Body Model**
  - **200-V Machine Model (A115)**
  - **1000-V Charged-Device Model (JS-002)**
- **Micro SIZE PACKAGES: SOT23-5, SC70-5**

APPLICATIONS

- **AC Receiver and**
- **Home Theaters**
- **Blu-ray Players and Home Theaters**
- **Desktops or Notebook PCs**
- **Digital Video Cameras (DVC)**
- **Mobile Phones**
- **Personal Navigation Device (GPS)**
- **Portable Media Player**

PACKAGE/ORDERING INFORMATION (1)

PRODUCT	ORDERING NUMBER	TEMPERATURE RANGE	PACKAGE LEAD	PACKAGE MARKING (2)	MSL (3)	PACKAGE OPTION
QN74LVC1G14	QN74LVC1G14DCKR	-40°C ~+125°C	SC70-5 (4)	CFR	MSL3	Tape and Reel,3000
	QN74LVC1G14DBVR	-40°C ~+125°C	SOT23-5	C14F	MSL3	Tape and Reel,3000

NOTE:

(1) This information is the most current data available for the designated devices. This data is subject to change without notice and revision of this document.

(2) There may be additional marking, which relates to the lot trace code information (data code and vendor code), the logo or the environmental category on the device.

(3) MSL, The Moisture Sensitivity Level rating according to the JEDEC industry standard classifications.

(4) Equivalent to SOT353.

FUNCTIONAL BLOCK DIAGRAM

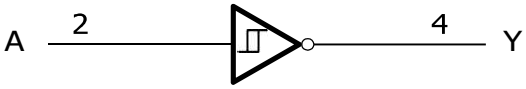

FUNCTION TABLE

INPUT	OUTPUT
A	**Y**
H	L
L	H

$Y=\overline{A}$

H=High Voltage Level

L=Low Voltage Level

PIN CONFIGURATION AND FUNCTIONS (TOP VIEW)

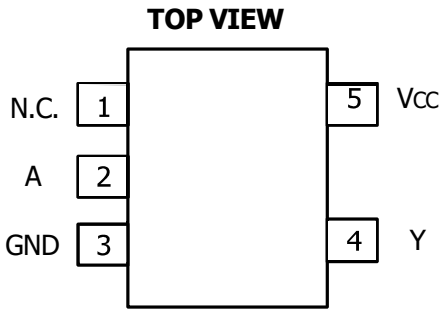

SOT23-5/SC70-5

PIN	NAME	I/O	FUNCTION
1	N.C.	-	Not connected
2	A	I	Input
3	GND	P	Ground
4	Y	O	Output
5	V_{CC}	P	Power Pin

REVISION HISTORY

Note: Page numbers for previous revisions may different from page numbers in the current version.

VERSION	Change Date	Change Item
Rev A.1	2026/06/10	Initial version completed

Absolute Maximum Ratings

over operating free-air temperature range (unless otherwise noted) (1) (2)

			MIN	MAX	UNIT
V_{CC}	Supply voltage range		-0.5	6.5	V
V_I	Input voltage range (2)		-0.5	6.5	V
Vo	Voltage range applied to any output in the high-impedance or power-off state(2)		-0.5	6.5	V
Vo	Voltage range applied to any output in the high or low state (2)(3)		-0.5	V_{CC}+0.5	V
I_{IK}	Input clamp current	V_I<0		-50	mA
I_{OK}	Output clamp current	V_O<0		-50	mA
I_O	Continuous output current			±50	mA
	Continuous current through V_{CC} or GND			±100	mA

Package Thermal Impedance

PARAMETER			MIN	MAX	UNIT
θ_{JA}	Package thermal impedance (4)	SOT23-5		208	°C/W
		SC70-5		283	

Temperature

PARAMETER		MIN	MAX	UNIT
Temperature	Junction temperature, T_J (5)	-65	150	°C
	Storage temperature, T_{stg}	-65	150	

ESD Ratings

The following ESD information is provided for handling of ESD-sensitive devices in an ESD protected area only.

	VALUE	UNIT
Human-Body Model (HBM)	±4000	V
Charged-Device Model (CDM)	±1000	
Machine Model (MM)	±200	

ESD SENSITIVITY CAUTION

ESD damage can range from subtle performance degradation to complete device failure. Precision integrated circuits may be more susceptible to damage because very small parametric changes could cause the device not to meet its published specifications.

NOTE:

(1) Stresses beyond those listed under Absolute Maximum Ratings may cause permanent damage to the device. These are stress ratings only, and functional operation of the device at these or any other conditions beyond those indicated under Recommended Operating Conditions is not implied. Exposure to absolute-maximum-rated conditions for extended periods may affect device reliability.

(2) The input and output negative-voltage ratings may be exceeded if the input and output current ratings are observed.

(3) The value of V_{CC} is provided in the Recommended Operating Conditions table.

(4) The package thermal impedance is calculated in accordance with JESD-51.

(5) The maximum power dissipation is a function of $T_{J(MAX)}$, $R_{\theta JA}$, and T_A. The maximum allowable power dissipation at any ambient temperature is $P_D = (T_{J(MAX)} - T_A) / R_{\theta JA}$. All numbers apply for packages soldered directly onto a PCB.

ELECTRICAL CHARACTERISTICS

over recommended operating free-air temperature range (Full=-40°C to +125°C, typical values are at T_A = +25°C, unless otherwise noted.) (1)

Recommended Operating Conditions

PARAMETER	SYMBOL	TEST CONDITIONS	MIN	MAX	UNIT
Supply voltage	V_{CC}	Operating	1.65	5.5	V
		Data retention only	1.5		
Input voltage	V_I		0	5.5	V
Output voltage	V_O		0	V_{CC}	V
Operating temperature	T_A		-40	+125	°C

DC Characteristics

PARAMETER		TEST CONDITIONS	V_{CC}	TEMP	MIN(2)	TYP(3)	MAX(2)	UNIT
V_{T+}	Positive going input threshold voltage		1.65V	Full	0.75		1.05	V
			2.3V		1.25		1.55	
			3V		1.5		2.1	
			4.5V		2.3		3.0	
			5.5V		2.8		3.4	
V_{T-}	Negative going input threshold voltage		1.65V	Full	0.3		0.6	V
			2.3V		0.35		0.65	
			3V		0.45		0.75	
			4.5V		0.7		1.0	
			5.5V		0.85		1.15	
ΔV_T	Hysteresis (V_{T+}-V_{T-})		1.65V	Full	0.35		0.6	V
			2.3V		0.6		1.2	
			3V		1.05		1.65	
			4.5V		1.6		2.0	
			5.5V		1.95		2.25	
V_{OH}		I_{OH} = -100μA	1.65V to 5.5V	Full	V_{CC}-0.1			V
		I_{OH} = -4mA	1.65V		1.2			
		I_{OH} = -8mA	2.3V		1.9			
		I_{OH} = -16mA	3V		2.4			
		I_{OH} =- 24mA			2.3			
		I_{OH} = -32mA	4.5V		3.8			
V_{OL}		I_{OL} = 100μA	1.65V to 5.5V	Full			0.1	V
		I_{OL} = 4mA	1.65V				0.45	
		I_{OL} = 8mA	2.3V				0.3	
		I_{OL} = 16mA	3V				0.4	
		I_{OL} = 24mA						
		I_{OL} = 32mA	4.5V				0.55	
I_I	A input	V_I=5.5V or GND	0V to 5.5V				0.55	
I_{off}		V_I or V_O=5.5V	0	+25°C		±0.1		μA
				Full			±5	
I_{CC}		V_I=5.5V or GND, I_O=0	1.65V to 5.5V	+25°C		±0.1		μA
				Full			±10	
ΔI_{CC}		One input at V_{CC}-0.6V, Other inputs at V_{CC} or GND	3V to 5.5V	+25°C		0.1		μA
				Full			10	
				Full			500	μA

(1) All unused inputs of the device must be held at V_{CC} or GND to ensure proper device operation.
(2) Limits are 100% production tested at 25°C. Limits over the operating temperature range are ensured through correlations using statistical quality control (SQC) method.
(3) Typical values represent the most likely parametric norm as determined at the time of characterization. Actual typical values may vary over time and will also depend on the application and configuration.

AC Characteristics

PARAMETER	SYMBOL	TEST CONDITIONS		MIN(2)	TYP(3)	MAX(2)	UNIT
Propagation Delay	t_{pd}	V_{CC}=1.8V±0.15V	C_L=30pF, R_L=500Ω		7.5		ns
		V_{CC}=2.5V±0.2V	C_L=30pF, R_L=500Ω		3.6		
		V_{CC}=3.3V±0.3V	C_L=50pF, R_L=500Ω		3.1		
		V_{CC}=5V±0.5V	C_L=50pF, R_L=500Ω		2.7		
Input Capacitance	C_i	V_{CC}=3.3V	V_I=V_{CC} or GND		4		pF
Power dissipation capacitance	C_{pd}	V_{CC}=1.8V	f=10MHz		20		pF
		V_{CC}=2.5V			21		
		V_{CC}=3.3V			22		
		V_{CC}=5V			25		

(1) All unused inputs of the device must be held at V_{CC} or GND to ensure proper device operation.
(2) This parameter is ensured by design and/or characterization and is not tested in production.
(3) Typical values represent the most likely parametric norm as determined at the time of characterization. Actual typical values may vary over time and will also depend on the application and configuration.

PARAMETER MEASUREMENT INFORMATION

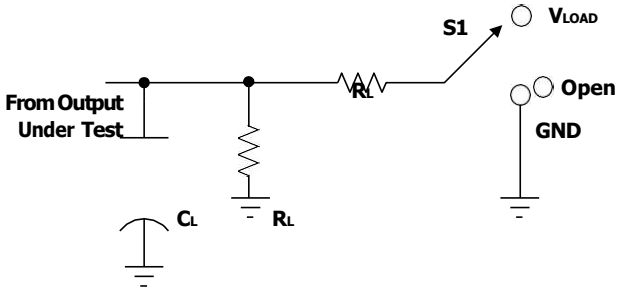

Figure 1. Load Circuit and Voltage Waveforms

TEST	S1
t_{PLH}/t_{PHL}	Open
t_{PLZ}/t_{PZL}	V_{LOAD}
$t_{PH\,Z}/t_{PZH}$	GND

V_{CC}	INPUTS V_I	INPUTS t_r/t_f	V_M	V_{LOAD}	C_L	R_L	V_Δ
1.8V±0.15V	V_{CC}	≤2ns	$V_{CC}/2$	2 x V_{CC}	30pF	500Ω	0.15V
2.5V±0.2V	V_{CC}	≤2ns	$V_{CC}/2$	2 x V_{CC}	30pF	500Ω	0.15V
3.3V±0.3V	3V	≤2.5ns	1.5V	6V	50pF	500Ω	0.3V
5V±0.5V	V_{CC}	≤2.5ns	$V_{CC}/2$	2 x V_{CC}	50pF	500Ω	0.3V

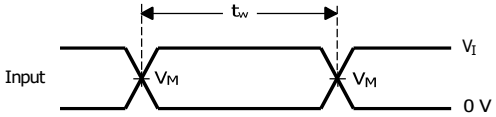

VOLTAGE WAVEFORMS
PULSE DURATION

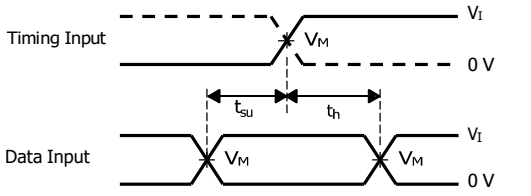

VOLTAGE WAVEFORMS
SETUP AND HOLD TIMES

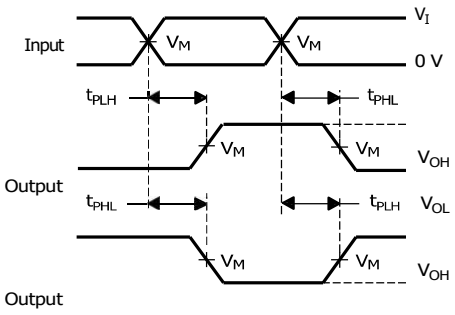

VOLTAGE WAVEFORMS PROPAGATION DELAY
TIMES INVERTION AND NONINVERTING OUTPUTS

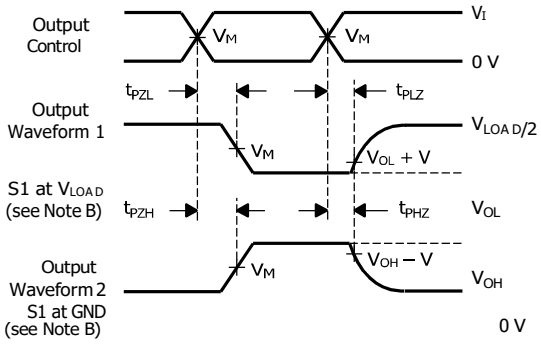

VOL

VOLTAGE WAVEFORMS ENABLE AND DISABLE TIMES
LOW-AND HIGH-LEVEL ENABLING

NOTES: A. C_L includes probe and jig capacitance.

B. Waveform 1 is for an output with internal conditions such that the output is low, except when disabled by the output control. Waveform 2 is for an output with internal conditions such that the output is high, except when disabled by the output control.

C. All input pulses are supplied by generators having the following characteristics: PRR ≤ 10 MHz, Z_O = 50Ω.

D. The outputs are measured one at a time, with one transition per measurement.
E. t_{PLZ} and t_{PHZ} are the same as t_{dis}.
F. t_{PZL} and t_{PZH} are the same as t_{en}.
G. t_{PLH} and t_{PHL} are the same as t_{pd}.
H. All parameters and waveforms are not applicable to all devices.

TAPE AND REEL INFORMATION

REEL DIMENSIONS

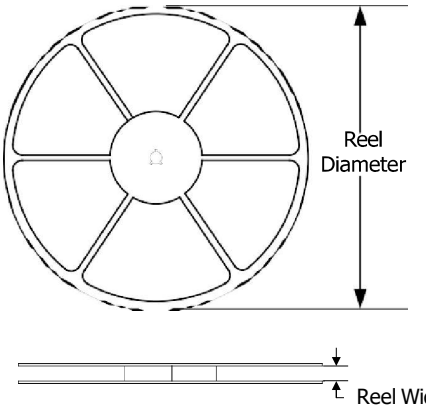

TAPE DIMENSION

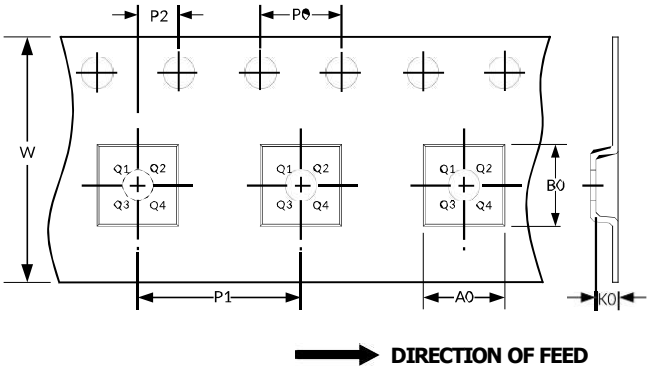

NOTE: The picture is only for reference. Please make the object as the standard.

KEY PARAMETER LIST OF TAPE AND REEL

Package Type	Reel Diameter	Reel Width (mm)	A0 (mm)	B0 (mm)	K0 (mm)	P0 (mm)	P1 (mm)	P2 (mm)	W (mm)	Pin1 Quadrant
SC70-5	7″	9.5	2.25	2.55	1.20	4.0	4.0	2.0	8.0	Q3
SOT23-5	7″	9.5	3.20	3.20	1.40	4.0	4.0	2.0	8.0	Q3

NOTE:
1. All dimensions are nominal.
2. Plastic or metal protrusions of 0.15mm maximum per side are not included.

PACKAGE OUTLINE DIMENSIONS

NOTE:

1. Plastic or metal protrusions of 0.15mm maximum per side are not included.
2. BSC (Basic Spacing between Centers), "Basic" spacing is nominal.
3. This drawing is subject to change without notice.

SOT23-5 (3)

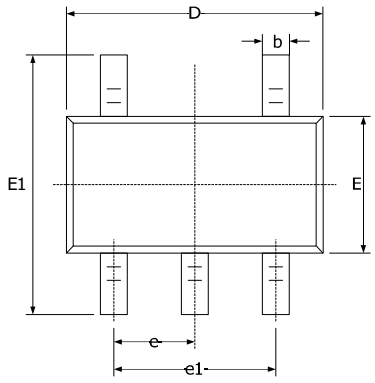

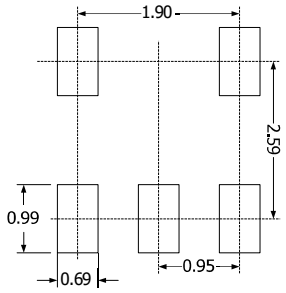

RECOMMENDED LAND PATTERN (Unit: mm)

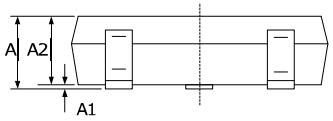

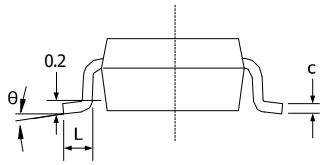

Symbol	Dimensions In Millimeters		Dimensions In Inches	
	Min	Max	Min	Max
A (1)	1.050	1.250	0.041	0.049
A1	0.000	0.100	0.000	0.004
A2	1.050	1.150	0.041	0.045
b	0.300	0.500	0.012	0.020
c	0.100	0.200	0.004	0.008
D (1)	2.820	3.020	0.111	0.119
E (1)	1.500	1.700	0.059	0.067
E1	2.650	2.950	0.104	0.116
e	0.950(BSC) (2)		0.037(BSC) (2)	
e1	1.800	2.000	0.071	0.079
L	0.300	0.600	0.012	0.024
θ	0°	8°	0°	8°

NOTE:

1. Plastic or metal protrusions of 0.15mm maximum per side are not included.
2. BSC (Basic Spacing between Centers), "Basic" spacing is nominal.
3. This drawing is subject to change without notice.

SC70-5 (3)

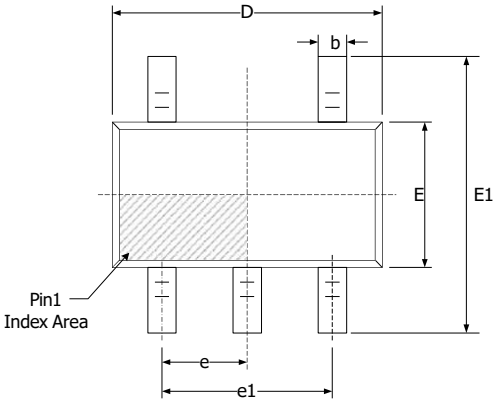

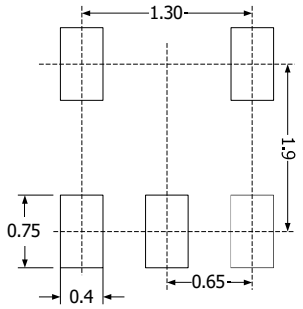

RECOMMENDED LAND PATTERN (Unit: mm)

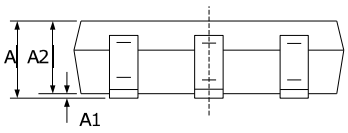

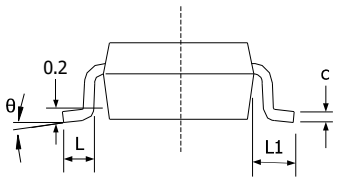

Symbol	Dimensions In Millimeters		Dimensions In Inches	
	Min	Max	Min	Max
A (1)	0.900	1.100	0.035	0.043
A1	0.000	0.100	0.000	0.004
A2	0.900	1.000	0.035	0.039
b	0.150	0.350	0.006	0.014
c	0.080	0.150	0.003	0.006
D (1)	2.000	2.200	0.079	0.087
E (1)	1.150	1.350	0.045	0.053
E1	2.150	2.450	0.085	0.096
e	0.650(BSC) (2)		0.026(BSC) (2)	
e1	1.300(BSC) (2)		0.051(BSC) (2)	
L	0.260	0.460	0.010	0.018
L1	0.525		0.021	
θ	0°	8°	0°	8°