WWW.XYECONN.COM

REV.	Q'TY	ECN. NO.	APR.	DATE

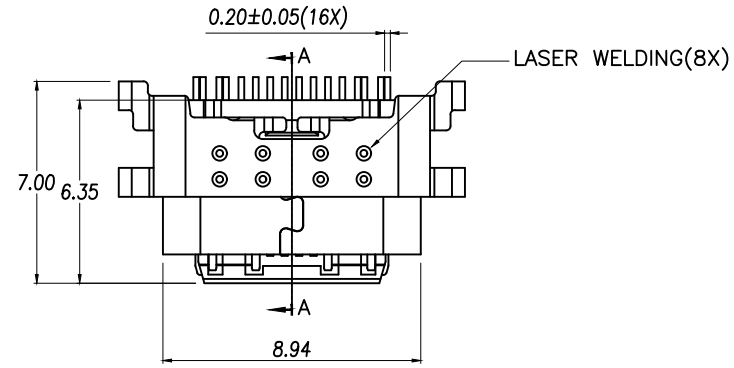

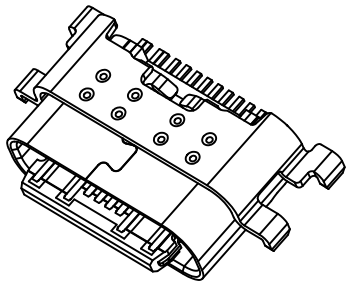

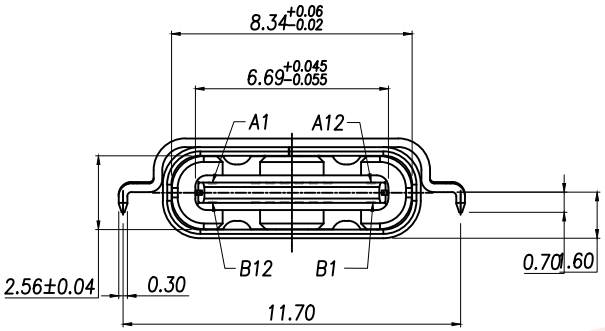

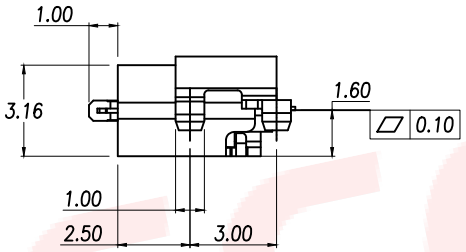

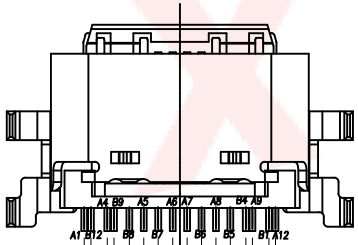

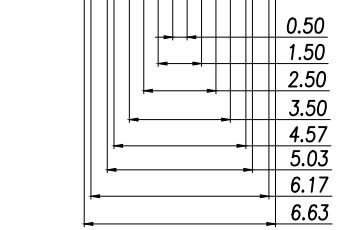

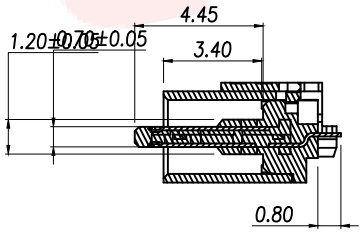

SECTION:A–A

NOTE:
1.MATERIAL SPECIFICATION:
 1.HOUSING:HIGH TEMPERATURE RESISTANT PLASTIC,UL94 V–0.(PA9T)
 2.TERMINAL: COPPER ALLOY(C18150)
 3.MID PLATE: STAINLESS STEEL(SUS301)
 4.INNER SHELL: STAINLESS STEEL(SUS304)
 5.COVER SHELL: STAINLESS STEEL(SUS304)
2.PLATING SPECIFICATION:
 2–1.TERMINAL:
  Ni 50u" MIN. UNDER PLATED OVER ALL.
  Au 3u" PLATED ON THE FUNCTIONAL AREA OF CONTACT.
  Au G/F ON THE SOLDER AREA OF CONTACT.
 2–2.INNER SHELL&COVER SHELL:
  Ni 30u" MIN. UNDER PLATED OVER ALL.
 2–3.MID PLATE:
  CLEAR ONLY
3.MECHANICAL PERFORMANCE,
 3–1.INSERTION FORCE: 0.5~2.0kgf.
 3–2.REMOVAL FORCE: 0.8kgf~2.0kgf.
 3–3.DURABILITY: 10000 CYCLES.
4.ELECTRICAL PERFORMANCE,
 4–1. VOLTAGE RATING: 5V
  CURRENT RATING: 5A
 4–2. LLCR:
  VBUS & GND PINS AND OTHER PINS: 40mΩ/PIN MAX.
  LLCR MAX. CHANGE OF ALL PINS: 10mΩ.
 4–3.INSULATION RESISTANCE: 100MΩ MIN
 4–4.DIELECTRIC WITHSTAND VOLTAGE,AC 100V FOR 1 MINUTE.
5. ENVIRONMENTAL PERFORMANCE:
 OPERATING TEMPERATURE: –40°C~+85°C.
6.IR REFLOW:
 THE PEAK TEMPERATURE ON THE BOARD SHALL
 BE MAINTAINED FOR 10 SECONDS AT 260°C.

DIMENSION IN mm		厦门市辛译精密电子有限公司		
TOLERANCE UNLESS OTHERWISE SPECIFIED		Xiamen XinYi Xyeconn Electronics Co.,Ltd		
.X±0.30	X.°± 10°	APR. Alex	TITLE: USB CF 16PIN (L=7.0) SINK 1.6MM WITH COVER	
.XX±0.20	.X°± 8°	CHK. Jack	DWG NO. TYPE–C–C33–1BBC160	
.XXX±0.10	.XX°± 5°	DRA. Can	PROJ.	CUSTOMER DRAWING
			SIZE A4 / SCALE 1:1	SHEET 1/1 / REV. A

F–RD–18A

WWW.XYECONN.COM

REV.	Q'TY	ECN. NO.	APR.	DATE

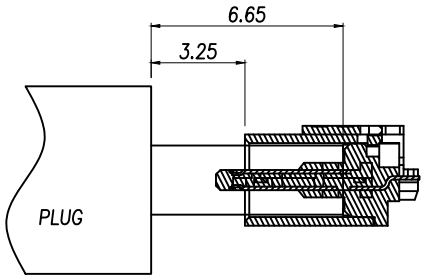

AFTER MATING

USB TYPE-C PIN ASSIGNMENTS

PIN NUMBER	SIGNAL NAME
A1	GND
A4	VBUS
A5	CC1
A6	Dp1
A7	Dn1
A8	SBU1
A9	VBUS
A12	GND

PIN NUMBER	SIGNAL NAME
B12	GND
B9	VBUS
B8	SBU2
B7	Dn2
B6	Dp2
B5	CC2
B4	VBUS
B1	GND

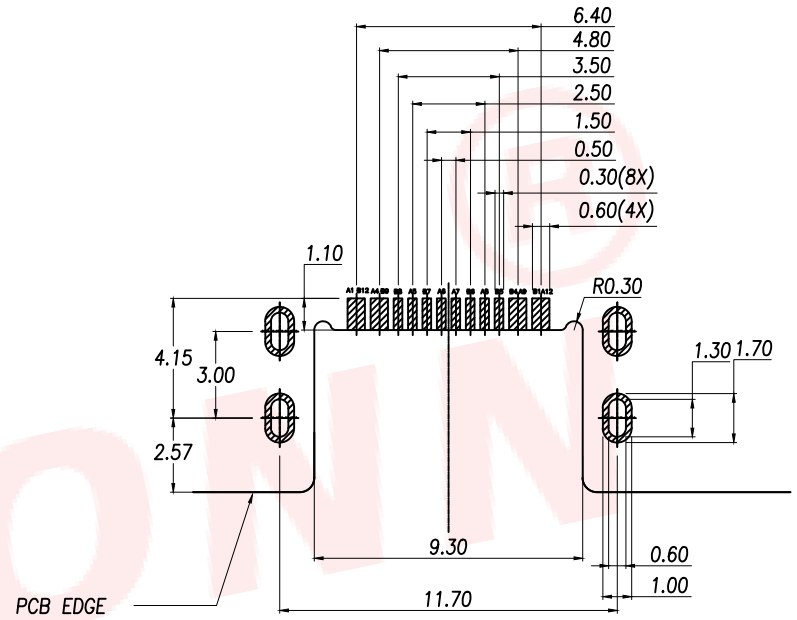

RECOMMENDED PCB LAYOUT(TOP VIEW)
THICKNESS 0.60MM;DEFAULT TOLERANCE:±0.05

DIMENSION IN mm		APR. Alex	TITLE: USB CF 16PIN (L=7.0) SINK 1.6MM WITH COVER
TOLERANCE UNLESS OTHERWISE SPECIFIED			
.X±0.30	X.°± 10°		
.XX±0.20	.X°± 8°	CHK. Jack	DWG NO. TYPE-C-C33-1BBC160
.XXX±0.10	.XX°± 5°	DRA. Can	PROJ. CUSTOMER DRAWING
			SIZE A4 SCALE 1:1 SHEET 1/1 REV. A

厦门市辛译精密电子有限公司
Xiamen XinYi Xyeconn Electronics Co.,Ltd

F-RD-18A

WWW.XYECONN.COM

REV.	Q'TY	ECN. NO.	APR.	DATE

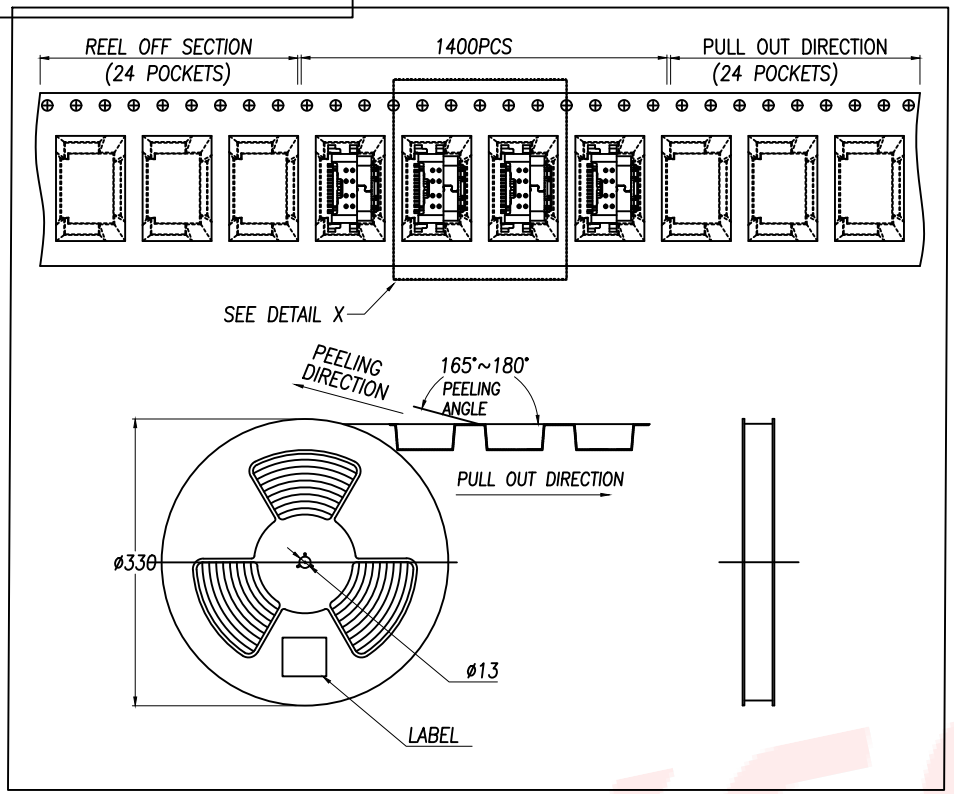

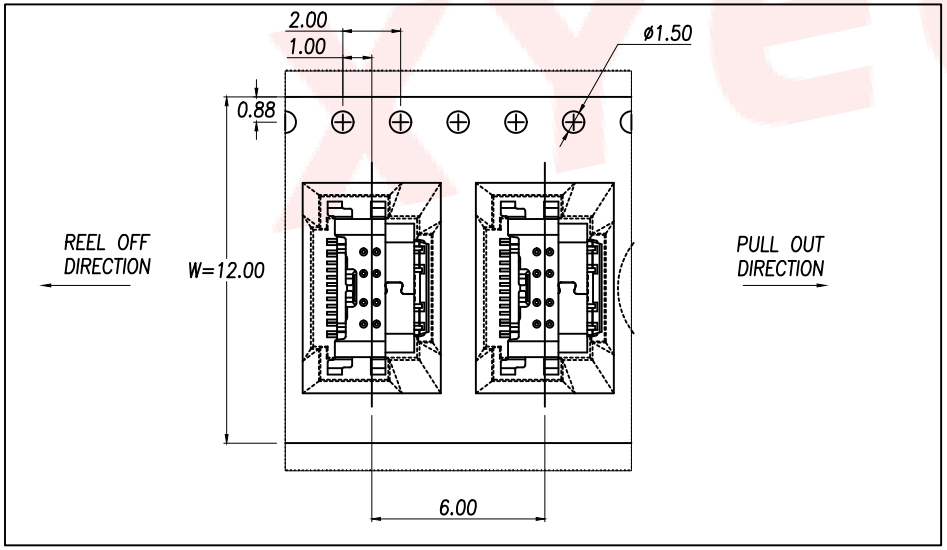

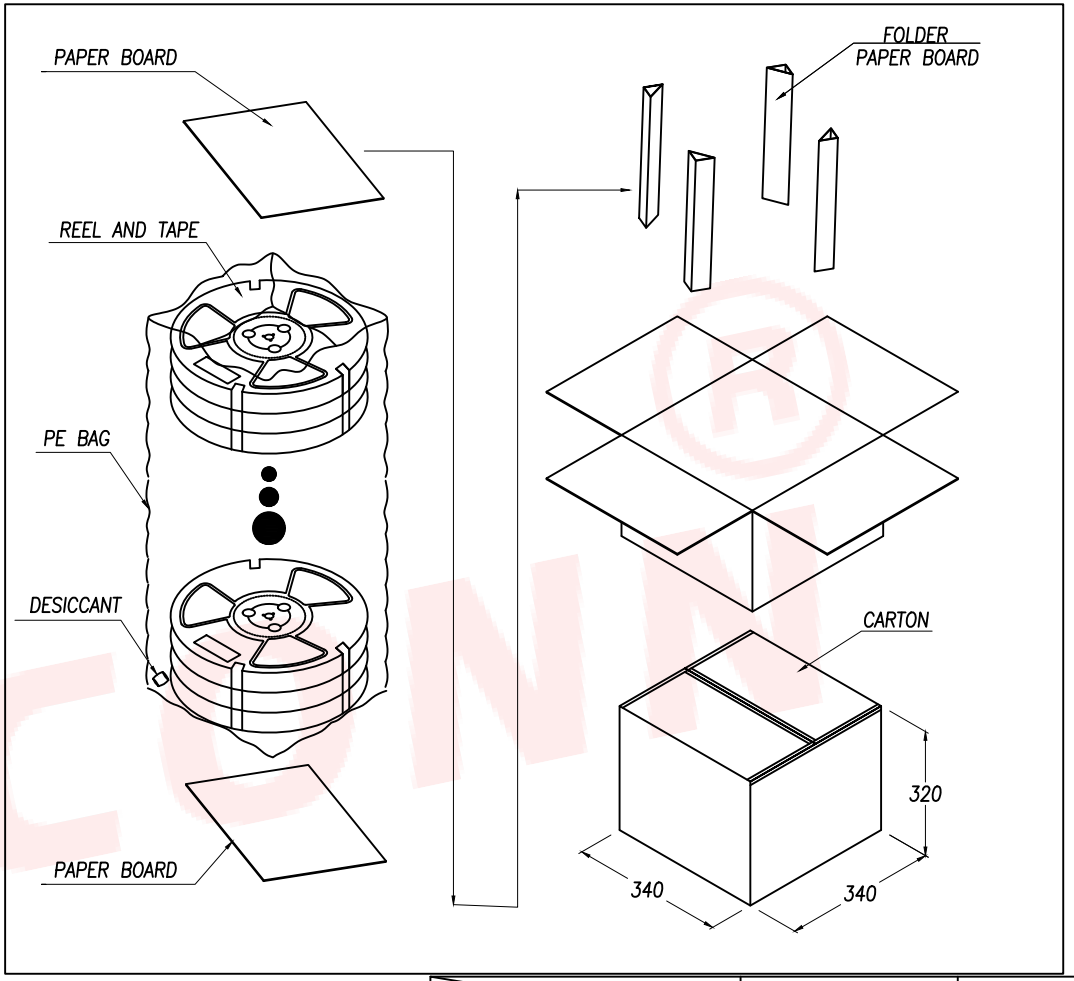

	REEL	CARTON
CONNECTOR (PCS)	1400	14000

DIMENSION IN mm	
TOLERANCE UNLESS OTHERWISE SPECIFIED	
.X±0.30	X.°± 10°
.XX±0.20	.X°± 8°
.XXX±0.10	.XX°± 5°

厦门市辛译精密电子有限公司
Xiamen XinYi Xyeconn Electronics Co.,Ltd

APR.	Alex
CHK.	Jack
DRA.	Can

TITLE: USB CF 16PIN (L=7.0) SINK 1.6MM WITH COVER
DWG NO. TYPE-C-C33-1BBC160
PROJ. CUSTOMER DRAWING
SIZE A4 | SCALE 1:1 | SHEET 1/1 | REV. A

F-RD-18A