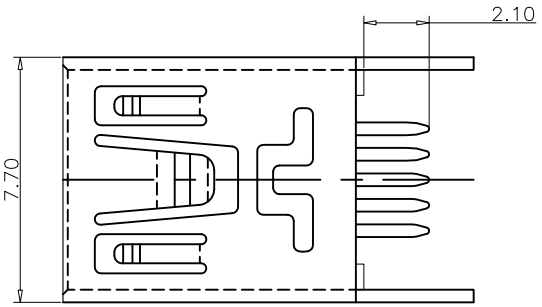

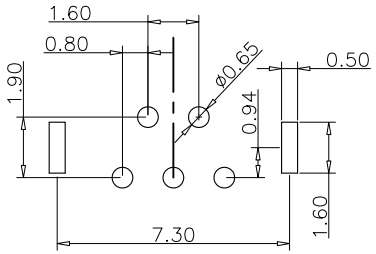

RECOMMENDED PCB LAYOUT

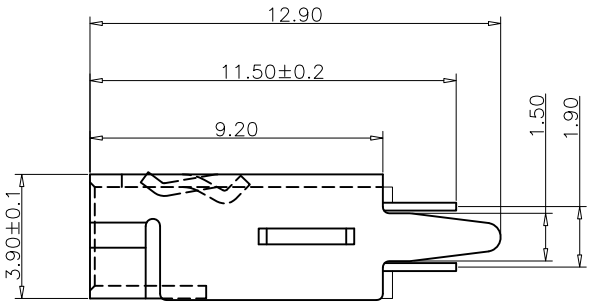

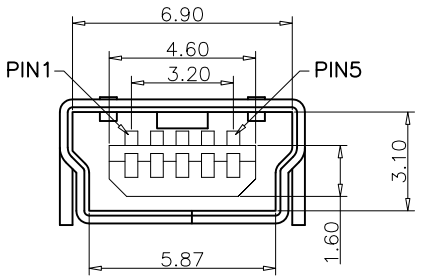

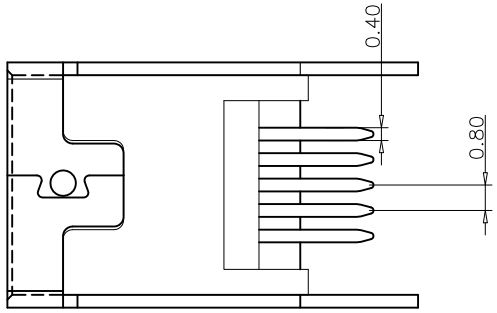

Specifications

A. Material
Plastic cement: LCP, Black
Contact: Copper Alloy, T=0.20mm
Shell: Copper Alloy, T=0.40mm

B. Plating
Contact Area: 1u" Au over 50u' min. Nickel
Solder Tails: 100u" min. Matte Tin over 50u' min. Nickel
Shell: 60u" min. Nickel

C. Electrical
Current Rating: 1.0A/contact terminal
Voltage Rating: 30V
Power Rating: 30W
Contact Resistance: 40mΩ max initial
50mΩ max after test
Dielectric Withstanding Voltage: 100V AC
Insulation Resistance: 100MΩ min.

D. Mechanical & Environmental
Operating Temperature: −25℃ to +85℃
Insertion force: 30.0 N Max
Withdrawal force: 7.0 N Min
Contact retention: 5.0N Min
Durability: 5000 cycles

Pin Numbe	Signal Name
1	VBUS
2	D−
3	D+
4	ID
5	GND

Part Number			Product Description				
PMBFB-R13B-003			Mini USB Receptacle, Type B, Vertical, 5 Pin, Thru-Hole, With Shell Stakes				
DWG.No.	P-MBF-034		Tolerances Unspecified			Units: Metric(mm)	ROHS COMPLIANT 2011/65/EU Deca-BDEv
Revision	A0		X.X	±0.35	X° ±5°		
Designed	Lee	11/30/20	X.XX	±0.25	X.X° ±2°		
Approved	Allen	11/30/20	X.XXX	±0.15			

Connecting the Future
www.szywf.com.cn
www.szywf.cn
Sheet No. 1/2

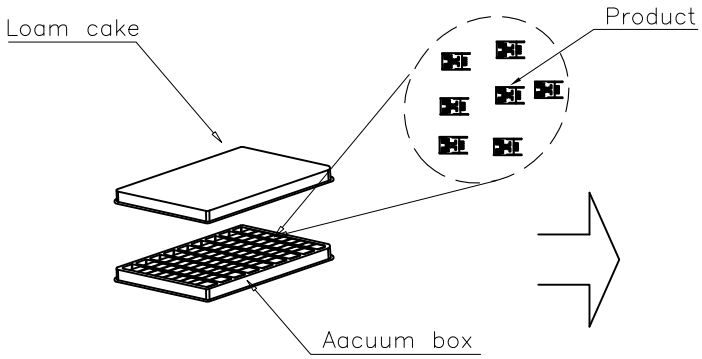

① PE vacuum box (1Set)

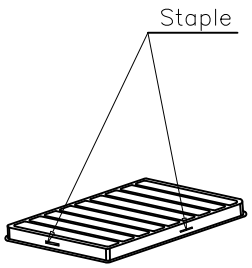

② 100Pcs/ box, all around with a stapler.

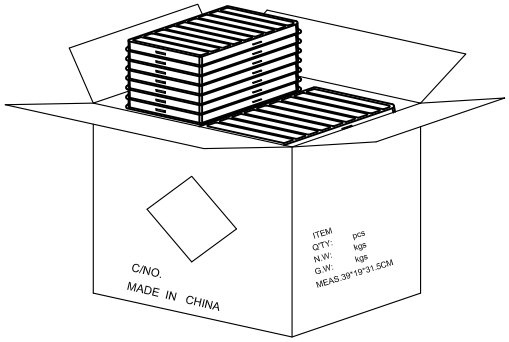

③ 100 boxes/box(10K Pcs)

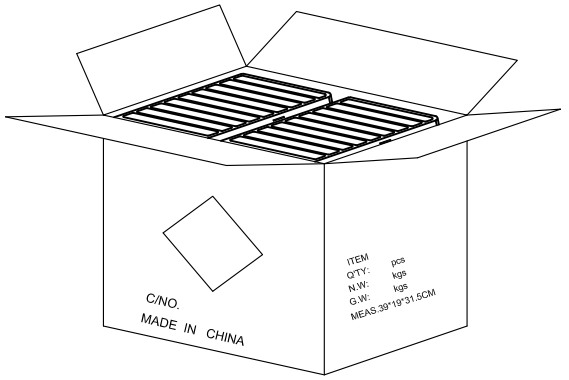

④ 50 boxes *2 per box, if the mantissa boxes are filled with fillers

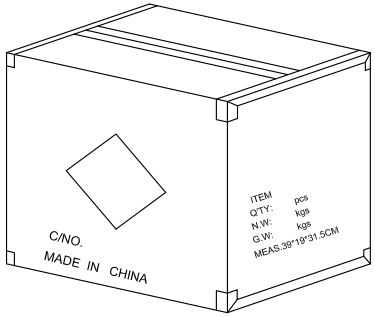

⑤ The outer box is sealed with transparent adhesive tape in the shape of "H".

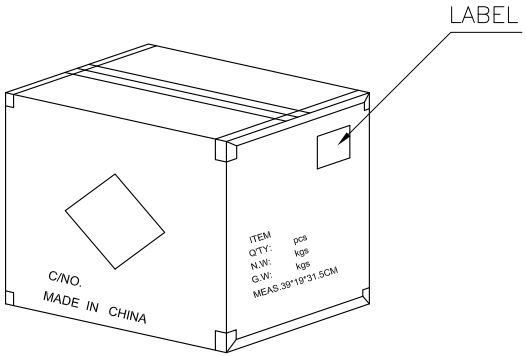

⑥ Paste the product or ROHS label as shown.

Part Number			Product Description					
PMBFB-R13B-003			Mini USB Receptacle, Type B, Vertical, 5 Pin, Thru-Hole, With Shell Stakes					
DWG.No.	P-MBF-034		Tolerances Unspecified				Units: Metric(mm)	ROHS COMPLIANT 2011/65/EU Deca-BDEv
Revision	A0		X.X	±0.35	X°	±5°		
Designed	Lee	11/30/20	X.XX	±0.25	X.X°	±2°		
Approved	Allen	11/30/20	X.XXX	±0.15				

Connecting the Future
www.szywf.com.cn
www.szywf.cn