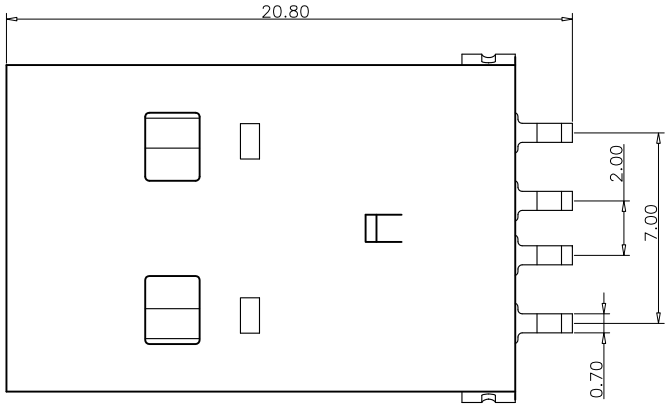

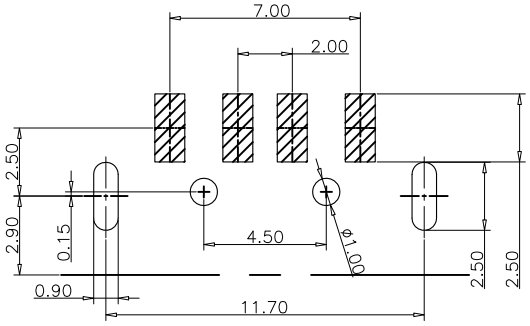

RECOMMENDED PCB LAYOUT

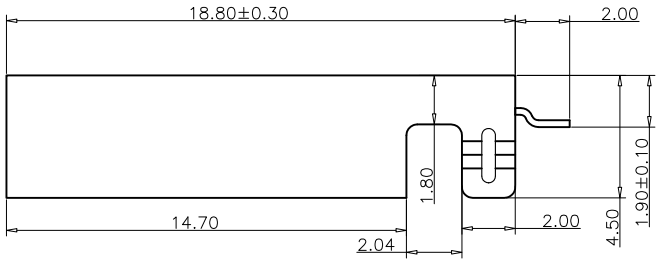



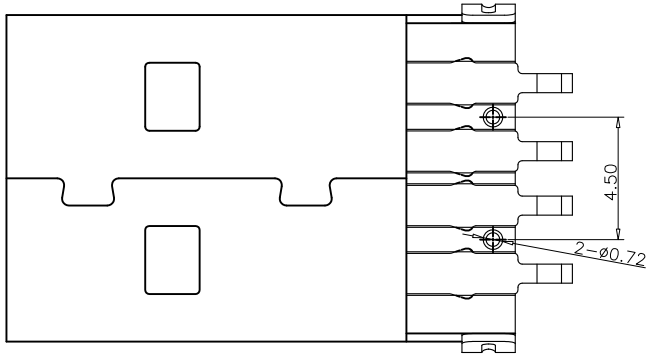



Specifications

A. Material
Plastic cement: LCP, Black
Contact: Copper Alloy, T=0.25mm
Shell: SPCC, T=0.30mm

B. Plating
Contact Area: 1u" Au over 50u' min. Nickel
Solder Tails: 100u" min. Matte Tin over 50u' min. Nickel
Shell: 80u" min. Nickel

C. Electrical
Current Rating: 1.5A/contact terminal
Voltage Rating: 30V
Power Rating: 45W
Contact Resistance: 40mΩ max initial
50mΩ max after test
Dielectric Withstanding Voltage: 100V AC
Insulation Resistance: 100MΩ min.

D. Mechanical & Environmental
Operating Temperature: -25℃ to +85℃
Insertion force: 35.7 N Max
Withdrawal force: 10.2 N Min
Contact retention: 4.5N Min
Durability: 1500 cycles

Pin Numbe	Signal Name
1	VBUS
2	D-
3	D+
4	GND

Part Number			Product Description				
PUBMA-R22B-071			USB 2.0 Plug, Type A, Horizontal, 4 Pin, SMT, Top Mount				
DWG.No.	P-UBM-050		Tolerances Unspecified			Units: Metric(mm)	ROHS COMPLIANT 2011/65/EU Deca-BDEv
Revision	A0		X.X ±0.35	X° ±5°			
Designed	Lee	11/26/20	X.XX ±0.25	X.X° ±2°			
Approved	Allen	11/26/20	X.XXX ±0.15				

Connecting the Future
www.szywf.com.cn
www.szywf.cn
Sheet No. 1/2

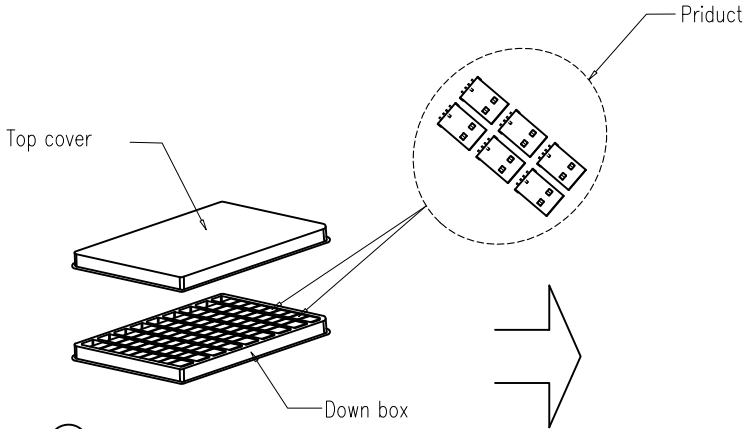

① PE vacuum box(1Set).

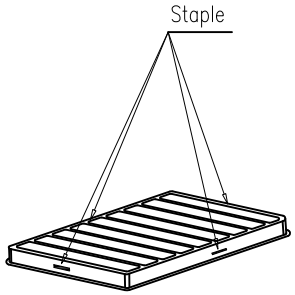

② 100pcs/box, four sides and stapled.

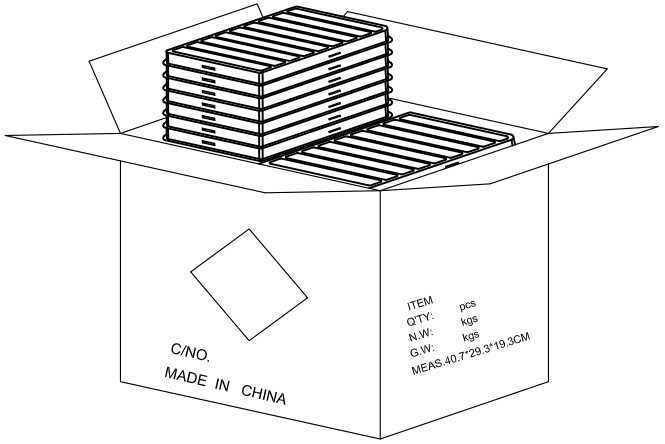

③ 50 box/case (5K pcs).

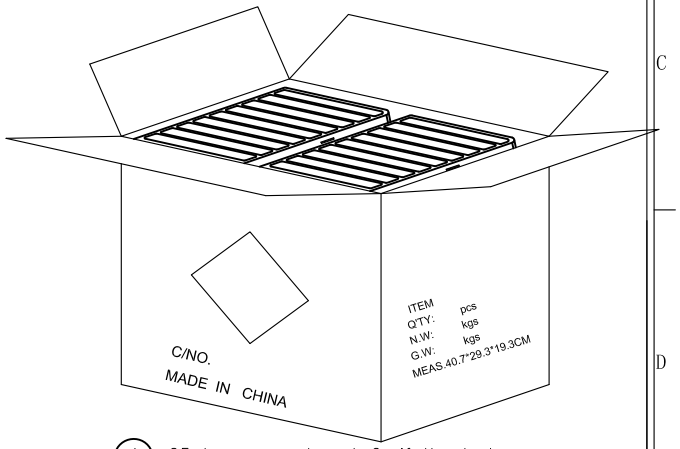

④ 25 boxes per box * 2, if the last box is added with filler in the space.

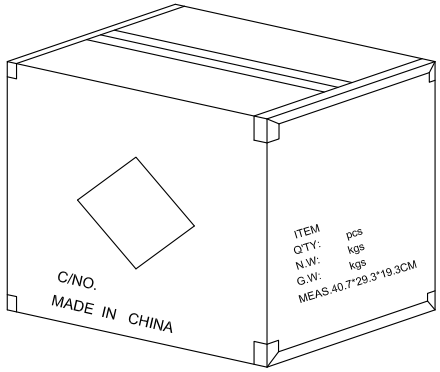

⑤ The outer box is sealed with transparent adhesive tape in the shape of "H".

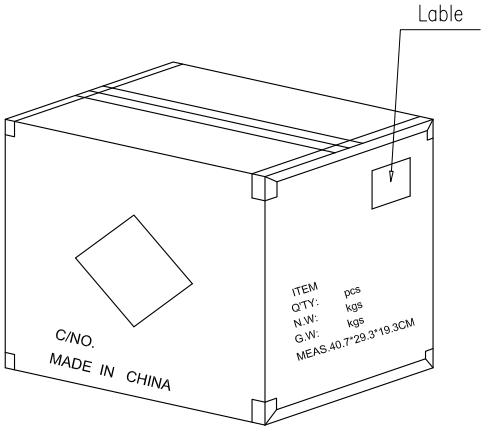

⑥ Paste the product or ROHS label as shown.

Part Number			Product Description				
PUBMA-R22B-071			USB 2.0 Plug, Type A, Horizontal, 4 Pin, SMT, Top Mount				
DWG.No.	P-UBM-050		Tolerances Unspecified			Units: Metric(mm)	ROHS COMPLIANT 2011/65/EU Deca-BDEv
Revision	A0		X.X ±0.35	X° ±5°			
Designed	Lee	11/26/20	X.XX ±0.25	X.X° ±2°			
Approved	Allen	11/26/20	X.XXX ±0.15				

Connecting the Future
www.szywf.com.cn
www.szywf.cn
Sheet No. 2/2