SMF3.3CAH

Surface Mount Transient Voltage Suppressor Rectifiers
Reverse Voltage 3.30 V
200 Watt Peak Pulse Power

SOD123FL

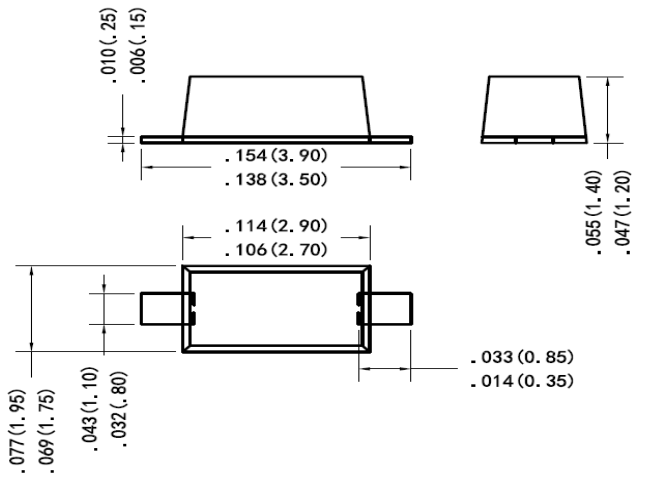

Unit: inch (mm)

Features

- Glass passivated chip
- 200 W peak pulse power capability with a 10/1000 us waveform, repetitive rate (duty cycle):0.01 %
- Excellent clamping capability
- Low reverse leakage
- Very fast response time
- Lead and body according with RoHS standard

Mechanical Data

- Case: SOD123FL Molded plastic
- Lead: Solderable per MIL-STD-750, method 2026
- Epoxy: UL 94V-0 rate flame retardant
- Polarity: Color band denotes cathode end except Bipolar
- Mounting position: Any

Maximum Ratings & Characteristics Ratings at 25℃ ambient temperature unless otherwise specified.

Parameter	Symbols	Value	Unit
Peak power dissipation with a 10/1000 us waveform(1)	P_{PP}	200	W
Peak pulse current wih a 10/1000 us waveform(1)	I_{PP}	25	A
Power dissipation on infinite heatsink at TL = 75 °C	P_D	1.0	W
Operating junction and storage temperature range	T_J , T_{STG}	-55 to +150	℃

Note:

1)Non-repetitive current pulse per Fig.5 and derated above TA= 25 °C per Fig.1 ;

Part Number	Device Marking Code	Reverse Stand-off Voltage	Breakdown Voltage V_{BR} @ I_T		Test Current	Max. Clamping Voltage @ I_{PP}	Max. Peak Pulse Current	Max. Reverse Leakage @ V_{RWM}
BI-POLAR	BI	V_{RWM}(V)	Min.(V)	Max.(V)	I_T(mA)	$V_{C\ MAX.}$(V)	I_{PP}(A)	I_R(uA)
SMF3.3CAH	GZ	3.30	5.2	6.5	10	8.0	25	400

Ratings and Characteristics Curves (TA=25℃ unless otherwise noted)

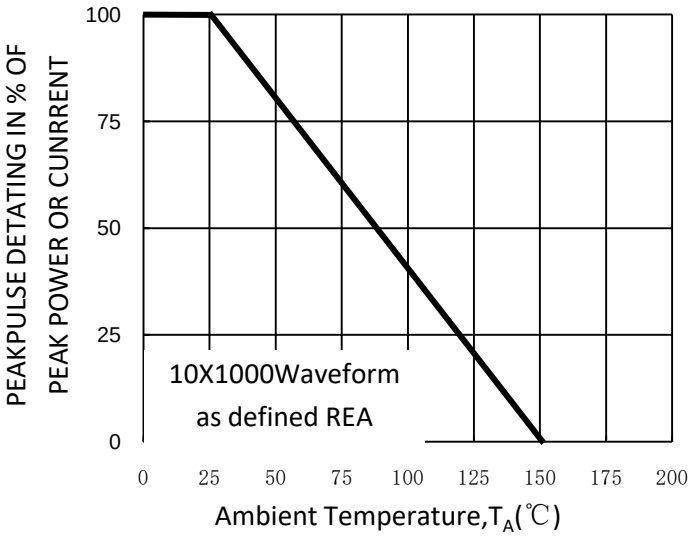

Fig. 1-Pulse Derating Curve

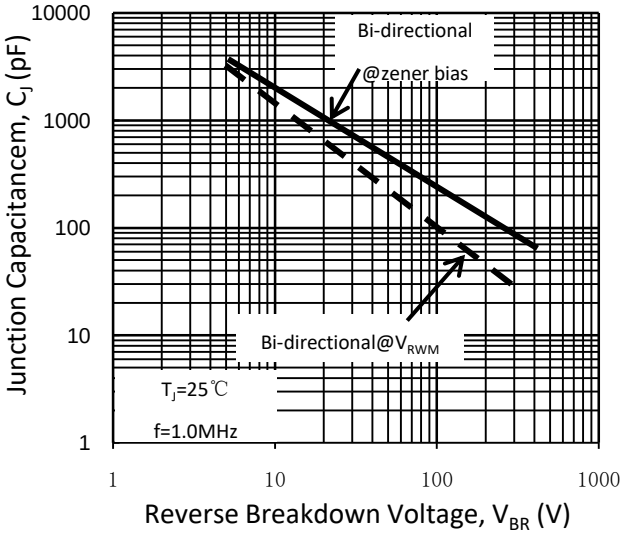

Fig. 2-Typical Junction Capacitance

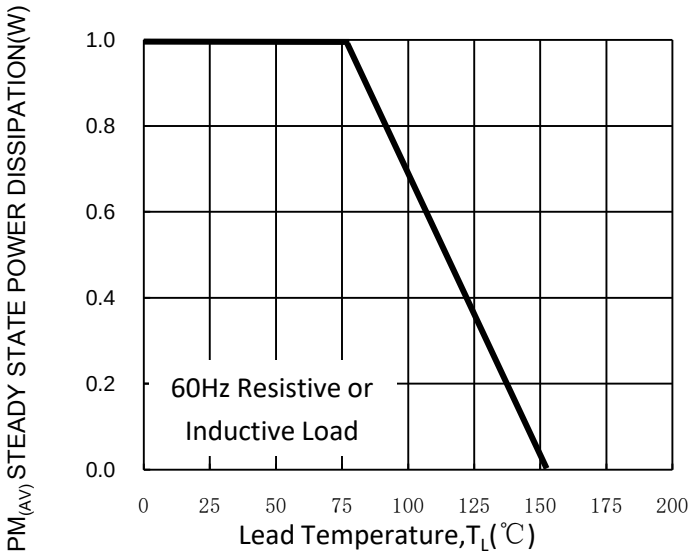

Fig. 3-Steady State Power Derating Curve

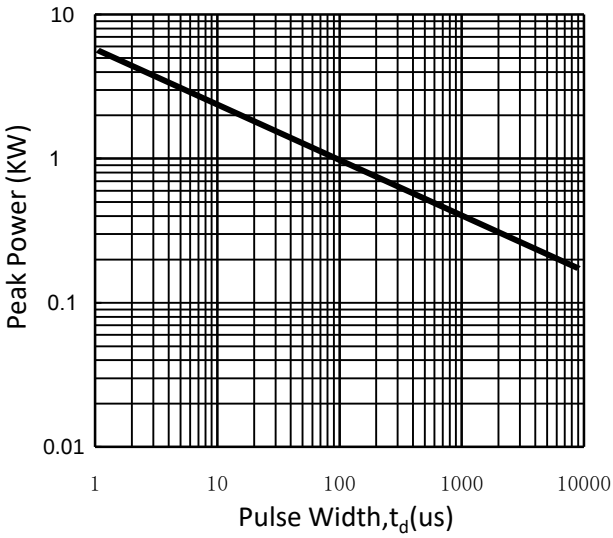

Fig. 4-Peak Pulse Power Rating Curve

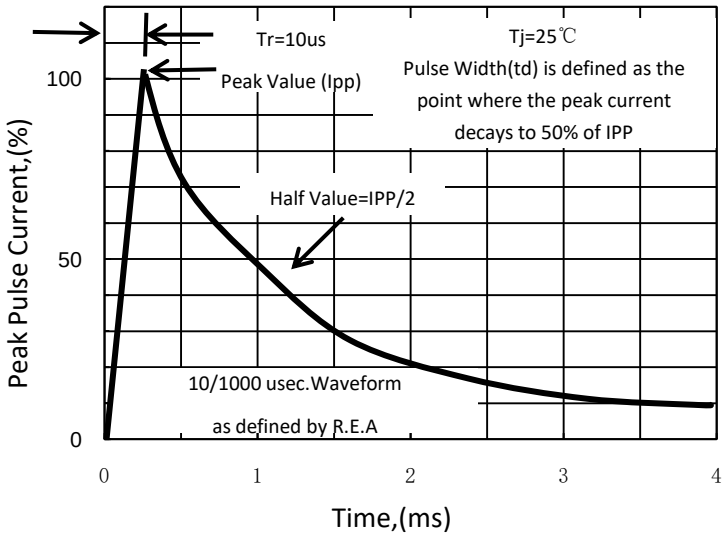

Fig. 5-Pulse Waveform