ROHS

| REV. | ECN NO. | DESCRIPTION | DRAW | DATE |
|---|---|---|---|---|
| | | | | |

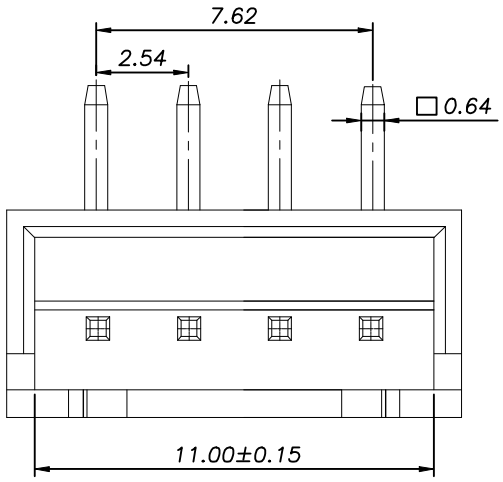


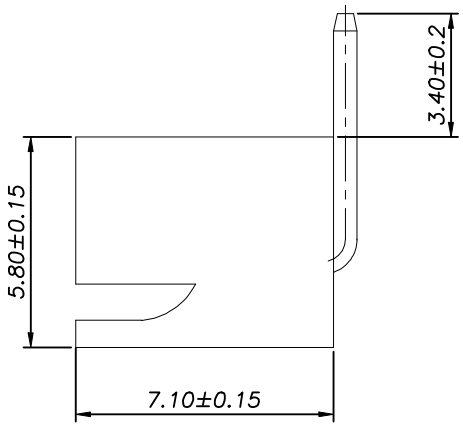


SPECIFICATIONS:

1.Current Rating: 3A AC, DC
2.Voltage Rating: 250V AC, DC
3.Temperatuer Range: −40°C~+105°C
4.Contact Resistance: 20mΩ Max
5.Insulation Resistance: 1000MΩ Min
6.WithstandingVoltang: 1000V AC/minute
7、Material: Wafer Nylon66 UL94−V0
PIN Brass Tin−plated

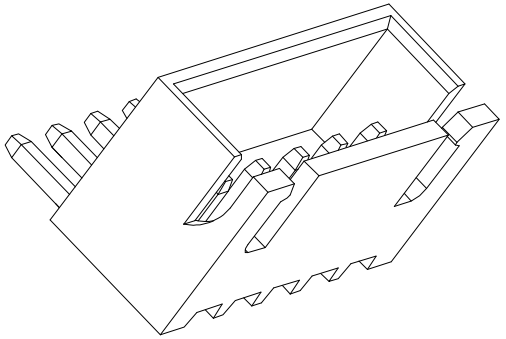

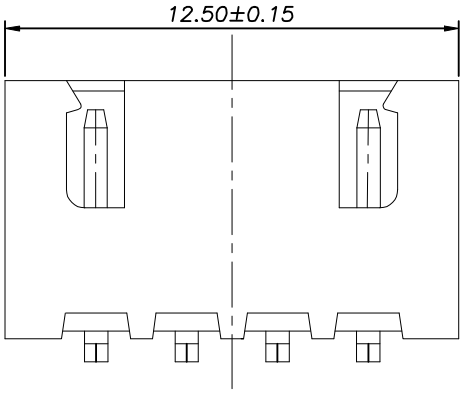


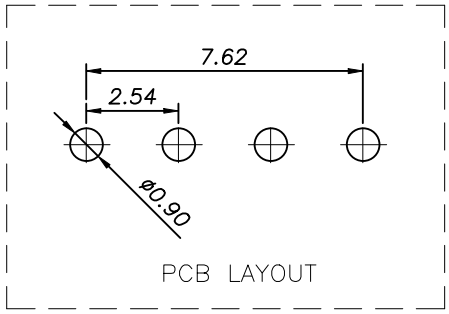


| | | | | | |
|---|---|---|---|---|---|
| COSTOMER DRAWING | | | LAILAN 深圳市莱联电子有限公司 SHENZHEN LAILIAN ELECTRONICS CO.,LTD | | |
| DRAWING | | | TITLE | 针座 PIN距2.54 4PIN弯插（XH系列） | REV. A |
| CHECK | | | PART NO. | LAIL-PHC2.54-4P-01-XH-RT | UNITS mm |
| APPROVAL | | | DWG. NO. | | Projection |
| TOLERANCES ARE | | | | | |
| 30-150 | ±0.35 | ANGLE | | | |
| 10-30 | ±0.2 | | | | |
| 5-10 | ±0.15 | ±3° | | | |
| 0-5 | ±0.1 | | | | |