CUSTOMER：

Doc No： MES013263

Rev： A0

RoHS Comp.
Halogen Free

承認書

APPROVAL SHEET

Specifications description ： **AP CAP 470uF-2.5V ESR9 7.3X4.3X1.9mm ±20%, 105℃ 2000hrs**

APAQ P/N ： **ACAH2R5S471E09**

Customer P/N ：

Date	Approved by	Checked by
APAQ R&D 2024.05.16 APPROVAL	陳明宗	藍上哲

Approved by Customer

(Signing or stamping here) ：

Approved Date ：

鈺邦科技股份有限公司

APAQ TECHNOLOGY CO., LTD

竹南科學園區

苗栗縣竹南鎮科東三路 2&6 號 4 樓

4F., No.2 & 6, Kedong 3rd Rd., Chunan Science Park, Miaoli County 350, Taiwan ,(R.O.C.)

AP-CAP ACAH SERIES SPECIFICATION

1. Application

This specification shall be specified to chip type conductive polymer aluminum solid electrolytic capacitors of ACAH series.

2. Product Identification

ACAH	2R0	S	471	E06	□
①	②	③	④	⑤	⑥

① Product Code

② Rated Voltage 2R0：2.0V、2R5：2.5V、6R3：6.3V、100：10V、160：16V、250：25V、350：35V

③ Case Height S：1.9 mm

④ Capacitance 330：33 μF、101：100 μF、221：220 μF、331：330 μF、471：470 μF、561：560 μF

⑤ ESR E03：3 mΩ、E06：6 mΩ、E09：9 mΩ、E15：15 mΩ、E40：40 mΩ

⑥ Suffix for special code Y：Capacitance +10 ~ -35%
Blank space：Capacitance ±20 %

3. Configuration and Dimensions

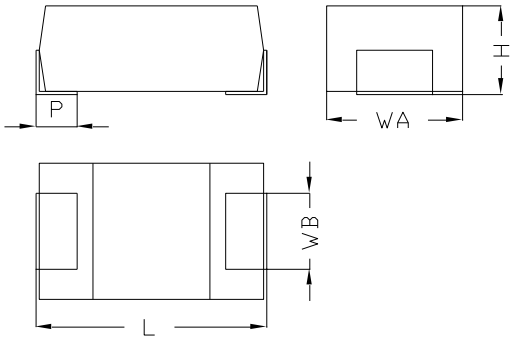

unit：mm

Case size	L	WA	WB	H	P
S	7.3±0.3	4.3±0.3	2.4±0.2	1.9±0.3	1.3±0.2

THIS DRAWINGS AND SPECIFICATIONS ARE THE PROPERTY OF APAQ TECHNOLOGY CO. LTD AND SHALL NOT BE REPRODUCT OR USED AS THE BASIC FOR THE MANUFACTURE OR SALE OF APPARATUS OR DEVICES WITHOUT PERMISSION.

鈺邦科技股份有限公司
APAQ TECHNOLOGY CO., LTD

DESIGNED BY：藍上哲	DRAWN BY：呂姿儀	CHECKED BY：藍上哲	APPROVED BY：陳明宗

TITLE：AP-CAP ACAH SERIES SPECIFICATION	DOCUMENT NO.	MES013263	REV
			A0

4. Marking

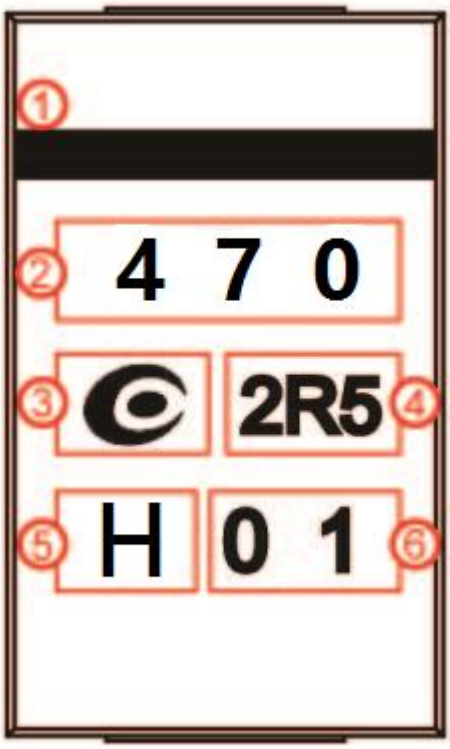

① ：Polarity Bar (+)
② ：Rated Capacity
③ ：Company Logo
④ ：Rated Voltage
⑤ ：Year(O for 2023、P for 2024)
⑥ ：Week

5. Specifications

5.1 Ratings

WV(VDC)	Cap (μF)@120Hz	tanδ Max. @120Hz	Leakage Current Max. (μA)	ESR Max. (mΩ) @100kHz	Ripple Current (A r.m.s) @100kHz	Part No.
2.5	470	0.06	117.5	9	6.3	ACAH2R5S471E09

Temperature Compensation Multipliers for Ripple Current			
	≦45℃	45℃ ＜T≦ 85℃	85℃＜T≦105℃
2 V.DC to 6.3 V.DC	1.0	0.7	0.25
10 V.DC to 25 V.DC	1.0	0.8	0.5

THIS DRAWINGS AND SPECIFICATIONS ARE THE PROPERTY OF APAQ TECHNOLOGY CO. LTD AND SHALL NOT BE REPRODUCT OR USED AS THE BASIC FOR THE MANUFACTURE OR SALE OF APPARATUS OR DEVICES WITHOUT PERMISSION.

5.2 Environmental Performance

Item	Conditions	Characteristics	
Category Temperature Range		-55 to +105 ℃	
Rated Voltage Range		2 V.DC to 25 V.DC,	
Capacitance Tolerance	at 20℃, 120Hz	±20 % (M)；Y：+10 ~ -35%	
Leakage Current	at 20℃ after 2 minutes	I ≦ 0.1CV (2 V.DC to 6.3 V.DC) I ≦ 0.3CV (10 V.DC to 25 V.DC) I：Leakage Current(μA), C：Rated Capacitance(μF), V：Rated Voltage(V)	
Surge Voltage	15℃ to 35℃	Rated voltage × 1.25 (2 V.DC to 16 V.DC) Rated voltage × 1.15 (20 V.DC to 25 V.DC)	
Dissipation Factor (tanδ)	at 20℃，120Hz	Case Height：S Type, 0.06 max.	
Endurance	105℃, rated voltage applied,2000 hrs	Appearance	No significant damage
		Capacitance Change	±20% of initial value
		Dissipation Factor	≤ 200% of the initial specified value
		Leakage Current	2 V.DC to 6.3 V.DC ≤ 300% of the initial specified value 10 V.DC to 25 V.DC ≤ within the initial limit
Damp Heat, Steady State	60℃, 90 to 95%RH, 500 hrs	Appearance	No significant damage
		Capacitance Change	(2V.DC to 2.5 V.DC) +70%, -20% of the initial value (10V.DC to 25V.DC) +60%, -20% of the initial value (6.3V.DC) +50%, -20% of the initial value
		Dissipation Factor	≤ 200% of the initial specified value
		Leakage Current	2 V.DC to 6.3 V.DC within the initial specified value 10 V.DC to 25 V.DC ≤ 300% of the initial specified value
Surge Voltage	The capacitors shall be subjected to 1000 cycles each consisting of charge with the surge voltages, at 15℃ to 35℃ for 30 seconds through a protective resistor(R=1KΩ)and discharge for 5min 30 seconds.	Appearance	No significant damage
		Capacitance Change	±10% of the initial value
		Dissipation Factor	within the initial specified value
		Leakage Current	within the initial specified value
Solderability	Pb-free solder Around 25% rosin melted ethanol or isopropylalcohol Temperature：245 ± 5 ℃ Immersing time：2 ± 0.5 s	More than 95% of outer terminal surface to be covered	
Resistance to Solvents	Solvent：isopropylalcohol Immersing time：30 ± 5 s Room temperature	No significant damage and marking readable	

THIS DRAWINGS AND SPECIFICATIONS ARE THE PROPERTY OF APAQ TECHNOLOGY CO. LTD AND SHALL NOT BE REPRODUCT OR USED AS THE BASIC FOR THE MANUFACTURE OR SALE OF APPARATUS OR DEVICES WITHOUT PERMISSION.

Item	Conditions	Characteristics	
Shelf life	Test temperature:105±2℃ Test time:500hrs.	Appearance	No significant damage
		Capacitance Change	±10% of the initial value
		Dissipation Factor	within the initial specified value
		Leakage Current	within the initial specified value

5.3 Mechanical Performance

Item	Conditions	Characteristics	
Vibration	Test for 2 hours each in the directions of X-Y-Z at the frequency of 10 to 2000 Hz and amplitude of 1.5 mm(10-2000-10).	Appearance	No significant damage
		Capacitance Change	±10% of the initial value
		Dissipation Factor	within the initial specified value
		Leakage Current	within the initial specified value
Shear Force	Side push direction Force：5 N Holding time：10 ± 0.5s	No significant damage in appearance	

6. Reflow Condition

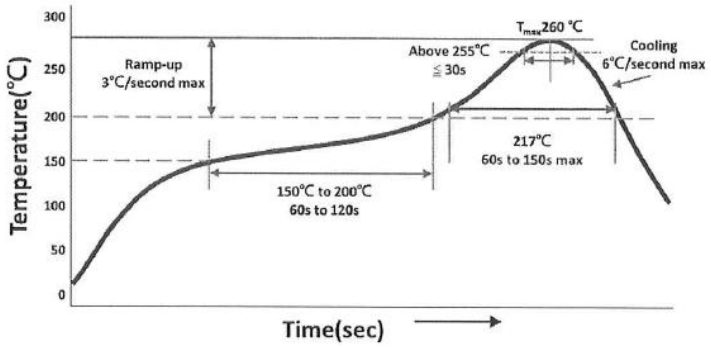

Recommended Pad Layout(mm)

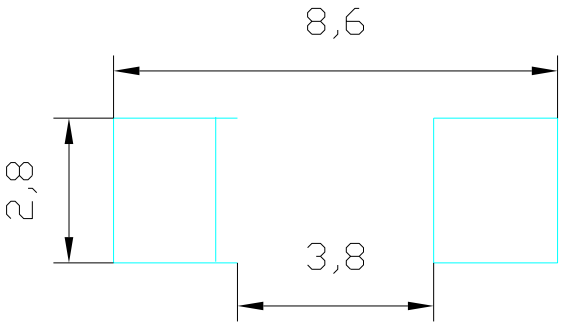

The recommended profile is according to the IPC/JEDEC J-STD-020E standard.

1st rising temperature	The normal to Preheating temperature	30s to 60s
Preheating	150℃ to 200℃	60s to 120s
2nd rising temperature	200℃~260℃	3℃/second max.
Main heating	Above 217℃ Above 255℃ T_{max} ≦260℃	60s to 150s max. ≦30s
Regular cooling	The peak temperature to 217℃	6℃/second max.
Reflow Cycle: 2 times		

THIS DRAWINGS AND SPECIFICATIONS ARE THE PROPERTY OF APAQ TECHNOLOGY CO. LTD AND SHALL NOT BE REPRODUCT OR USED AS THE BASIC FOR THE MANUFACTURE OR SALE OF APPARATUS OR DEVICES WITHOUT PERMISSION.

7. Taping Packing and Label Marking

7.1 Carrier Tape Dimensions

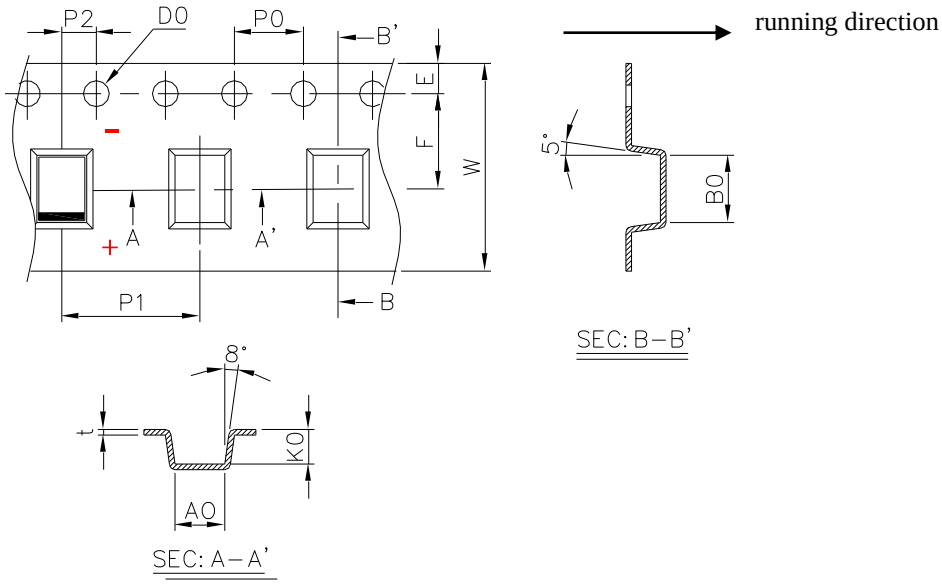

unit：mm

	W	P1	E	F	D0	P0	P2	A0	B0	K0	t
Dimension	12.00	8.00	1.75	5.50	1.50	4.00	2.00	5.00	7.60	2.30	0.24
Tolerance	±0.10	±0.10	±0.10	±0.10	+ 0.10 − 0.00	±0.10	±0.10	±0.10	±0.10	±0.10	±0.10

7.2 Taping Reel Dimensions

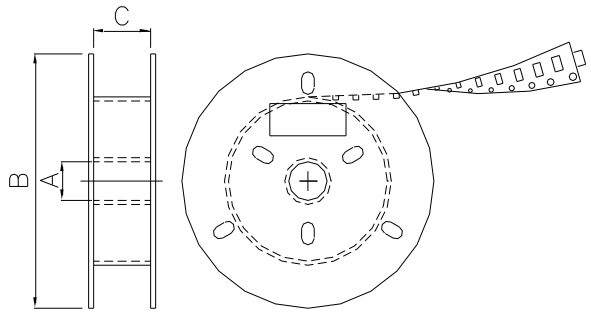

Reel Dimension (mm)		
A	B	C
13.2±0.3	330±1.0	13.5±0.5

7.3 Label Marking

The label specified as follows shall be put on the side of reel.

(1) Part No.

(2) Quantity. (3.5 kpcs / reel)

(3) Lot No.

THIS DRAWINGS AND SPECIFICATIONS ARE THE PROPERTY OF APAQ TECHNOLOGY CO. LTD AND SHALL NOT BE REPRODUCT OR USED AS THE BASIC FOR THE MANUFACTURE OR SALE OF APPARATUS OR DEVICES WITHOUT PERMISSION.

7.4 Dimension of inner and outer carton box

3.5kpcs capacitors were packed in a taping reel, 6 reels were packed in a inner carton box (W374*D370*H116mm) and 2 inner carbon box were packed in a outer shipping carton box (W392*D252*H390mm), 42kpcs capacitors in a outer carton box.

Inner Carton Box

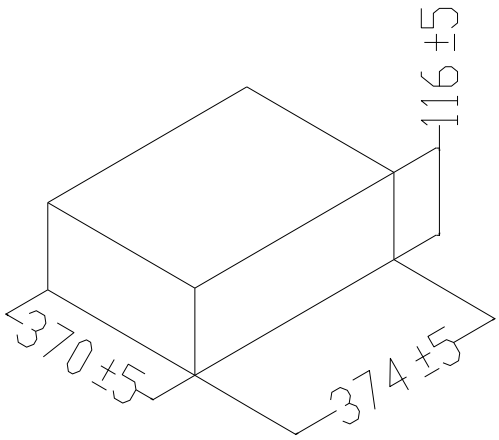

unit：mm

Outer Carton Box

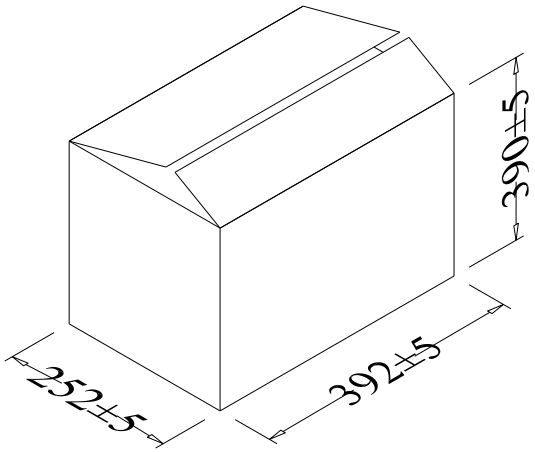

unit：mm

8. Precautions for Handling

8.1 Storage：All AP-Cap series are classified as MSL-3 (Moisture Sensitivity Level 3) from the IPC/JEDEC-STD-020 standard. Product should be packaged in a moisture barrier bags with desiccant and moisture indicator card. The recommended storage condition is as below.

Temperature: 5 °C to 30 °C

Humidity: Less than 60 % RH

The maximum storage period is no more than 1 year before opening bags, and capacitors should be used within 7 days after opening bags. If these conditions are exceeded, the product may absorb moisture and have damage risk to the exterior by heat stress during mounting. Those product should be baked again before mounting, and APAQ's recommended baking conditions follow the standard of IPC/JEDEC J-STD-033.

8.2 Environment：Capacitors are not subject to direct contact with water, salt water, chemically gas, acidic and alkaline environment.

8.3 Disposal：Treat Capacitors as industrial waste because they consist of various metals and resin.

THIS DRAWINGS AND SPECIFICATIONS ARE THE PROPERTY OF APAQ TECHNOLOGY CO. LTD AND SHALL NOT BE REPRODUCT OR USED AS THE BASIC FOR THE MANUFACTURE OR SALE OF APPARATUS OR DEVICES WITHOUT PERMISSION.