

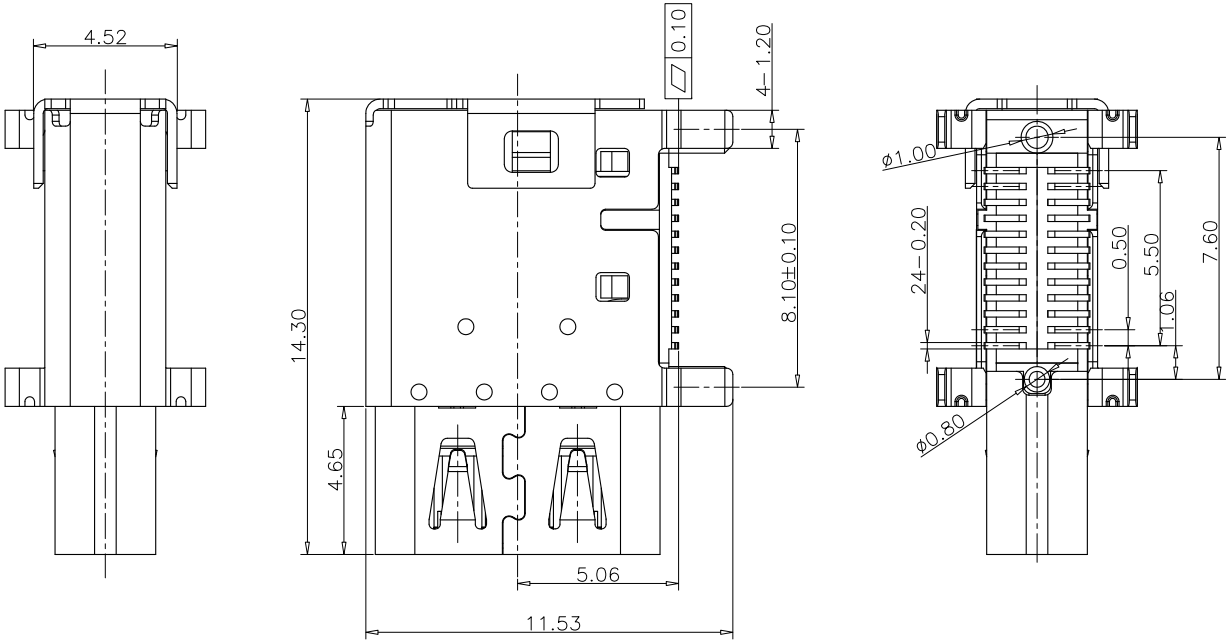

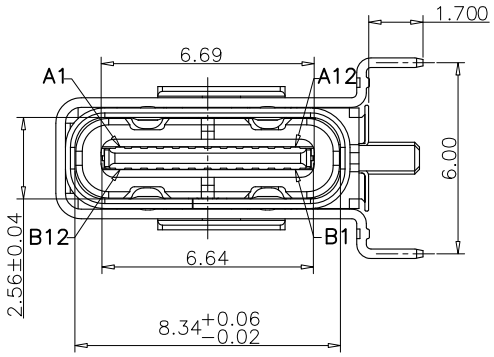

Specifications

A. Material
Insulator: LCP, UL94 V-0, Black
Contact: Copper Alloy, T=0.12mm
Mid Plate: Stainless Steel, T=0.15mm
Shell: Stainless Steel, T=0.30mm
EMI: Stainless Steel, T=0.10mm

B. Plating
Contact Area: 3u" Au over 60u' min. Nickel
Solder Tails: Gold Flash Au over 60u" min. Nickel
Shell: 50u" min. Nickel
EMI: 50u" min. Nickel
Mid Plate: No Plating

C. Electrical
Current Rating: 5.00A collectively for VBus & GND pins
1.25A for A5/B5 pins
0.25A for all other pins
Voltage Rating: 48V
Power Rating: 240W
Contact Resistance: 40mΩ max initial
50mΩ max after test
Dielectric Withstanding Voltage: 100V AC
Insulation Resistance: 100MΩ min.

D. Mechanical & Environmental
Operating Temperature: -25℃ to +85℃
Mating Force: 5 to 20 N.
Unmated Force: 6 to 20 N after test
Durability: 10,000 cycles

Part Number			Product Description				
PTCFW-H22E-002			USB4 Type C Receptacle, Flag Type, Dual Row SMT, PCB Top Mount, 24Pin				
DWG.No.	P-TCF-097		Tolerances Unspecified			Units: Metric(mm)	ROHS COMPLIANT 2011/65/EU Deca-BDEV
Revision	A0		X.X	±0.35	X° ±5°		
Designed	Lee	11/24/20	X.XX	±0.25	X.X° ±2°		
Approved	Allen	11/24/20	X.XXX	±0.15			

Connecting the Future
www.szywf.com.cn
www.szywf.cn
Sheet No. 1/3

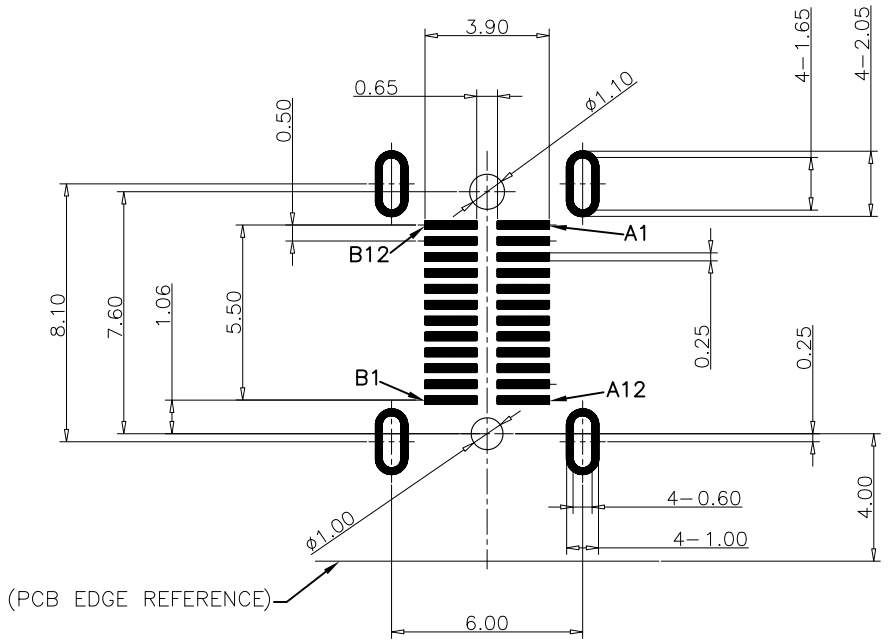

RECOMMENDED PCB LAYOUT(COMPONENT SIDE)

TOLERANCE FOR PCB LAYOUT IS ±0.05

PIN ASSIGNMENTS

PIN NUMBER	SIGNAL NAME	PIN NUMBER	SIGNAL NAME
A1	GND	B12	GND
A2	TX1+	B11	RX1+
A3	TX1−	B10	RX1−
A4	VBUS	B9	VBUS
A5	CC1	B8	SBU2
A6	DP1	B7	DN2
A7	DN1	B6	DP2
A8	SBU1	B5	CC2
A9	VBUS	B4	VBUS
A10	RX2−	B3	TX2−
A11	RX2+	B2	TX2+
A12	GND	B1	GND

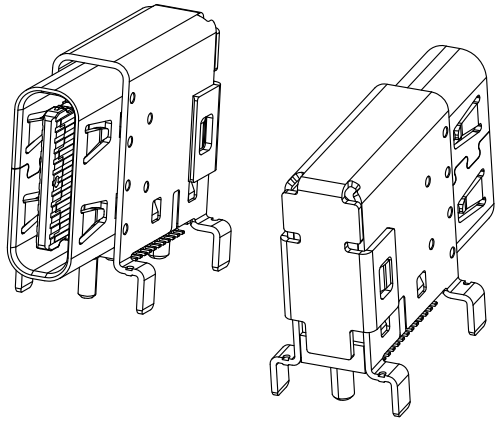

Part Number			Product Description				
PTCFW-H22E-002			USB4 Type C Receptacle, Flag Type, Dual Row SMT, PCB Top Mount, 24Pin				
DWG.No.	P-TCF-097		Tolerances Unspecified			Units: Metric(mm)	ROHS COMPLIANT 2011/65/EU Deca-BDEv
Revision	A0		X.X ±0.35		X° ±5°		
Designed	Lee	11/24/20	X.XX ±0.25		X.X° ±2°		
Approved	Allen	11/24/20	X.XXX ±0.15				

Connecting the Future

www.szywf.com.cn

www.szywf.cn

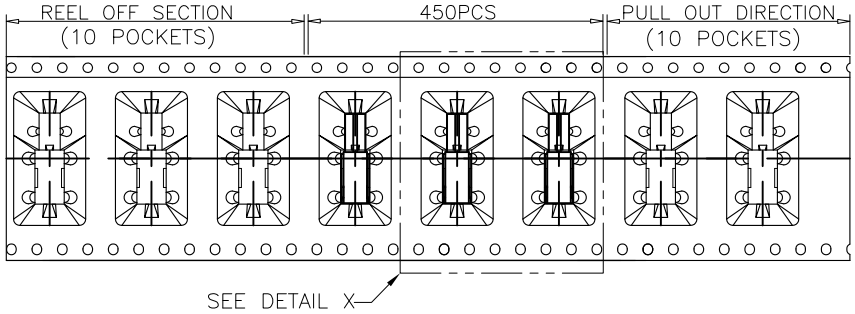

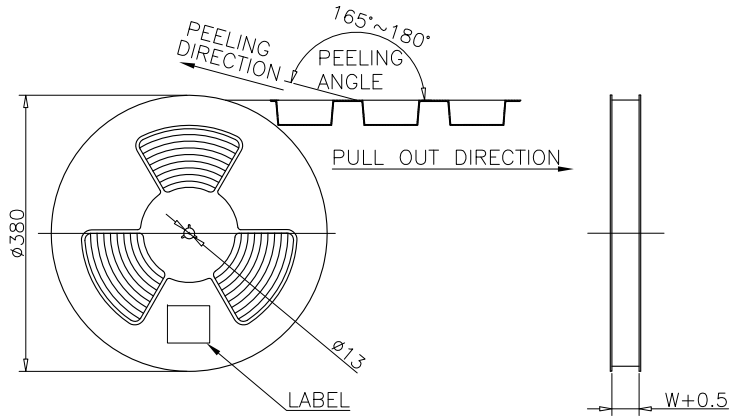

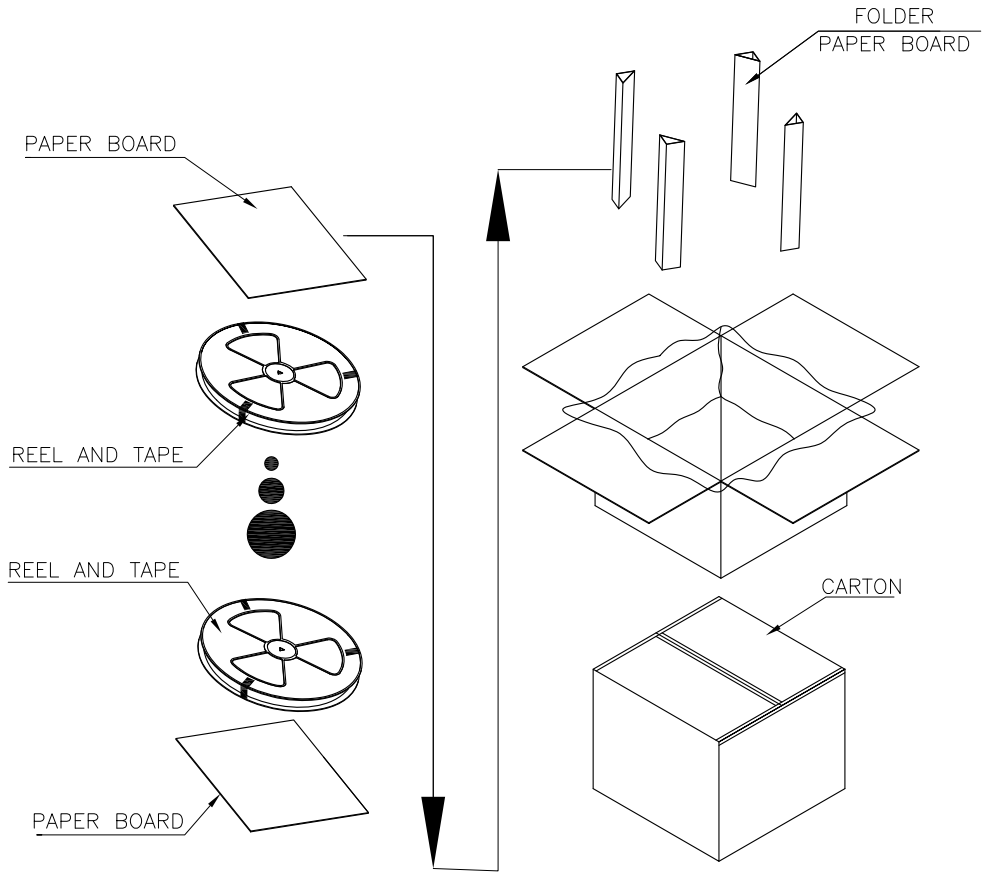

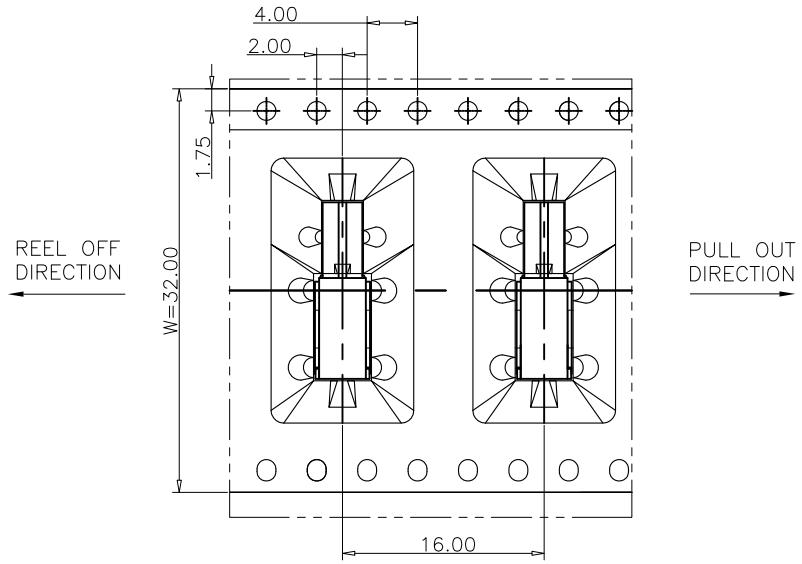

	REEL	CARTON
QUANTITY (PCS)	450	3600

Part Number			Product Description				
PTCFW-H22E-002			USB4 Type C Receptacle, Flag Type, Dual Row SMT, PCB Top Mount, 24Pin				
DWG.No.	P-TCF-097		Tolerances Unspecified			Units: Metric(mm)	ROHS COMPLIANT 2011/65/EU Deca-BDEV
Revision	A0		X.X	±0.35	X° ±5°		
Designed	Lee	11/24/20	X.XX	±0.25	X.X° ±2°		
Approved	Allen	11/24/20	X.XXX	±0.15			

Connecting the Future
www.szywf.com.cn
www.szywf.cn
Sheet No. 3/3