深圳市晶友嘉电子有限公司

SHENZHEN JINGYOUJIA ELECTRONIC CO.，LTD

CRYSTAL RESONATOR SPECIFICATIONS

石英晶体谐振器承认书

客户 Customer：	立创商城
型号 Product：	S1T
客户料号 Code No：	
我司料号 Code No：	S1T14318ZWGAC
频率 Frequency：	14.31818MHz
数量 Sample Quantity：	
日期 Date：	2023-5-15

深圳市晶友嘉电子有限公司

SHENZHEN JINGYOUJIA ELECTRONIC CO.，LTD

深圳市龙华区东环二路数字智能颖博园 B 栋 4 楼

TEL：86-755-32840201　32850080

FAX：86-755-84269460

供应商确认栏：

制作 Handler	确认 Checked	核审 Approved
戴晓嘉	陈斌	李晨

客户承认栏：

承认 Checked	核审 Approved

1.Electrical Parameters

No.	Item	Symb	Electrical Specification				Remark
			Min.	Type	Max.	Units	
1	Nominal Frequency	F0	14.31818			MHz	
2	Mode of Vibration		Fundamental				
3	Frequency Tolerance	Δ F/F0	-20		20	ppm	At 25℃±3℃
4	Operating Temperature Range	TOPR	-20		70	℃	
5	Frequency Stability	TC	-30		30	ppm	
6	Storage Temperature	TSTG	-40		90	℃	
7	Load Capacitance	CL		20		PF	
8	Equivalent Series Resistance	ESR			70	Ω	
9	Drive Level	DL		100		μW	
10	Insulation Resistance	IR	500			MΩ	At 100VDC
11	Shunt Capacitance	C0				PF	
12	Motional Capacitance	C1				PF	
13	Aging Per Year	Fa	-3		3	ppm	First Year

2. Equivalent Circuit：

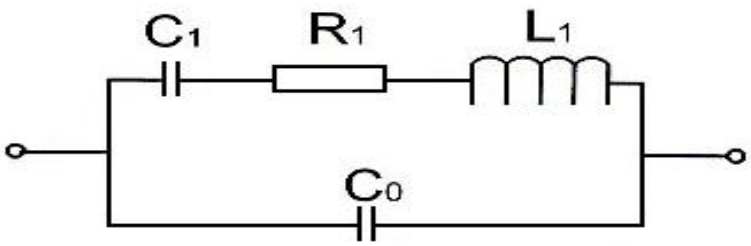

Equivalent Circuit

3.实物 Product



4.外型尺寸 Outline Dimensions (unit:mm)

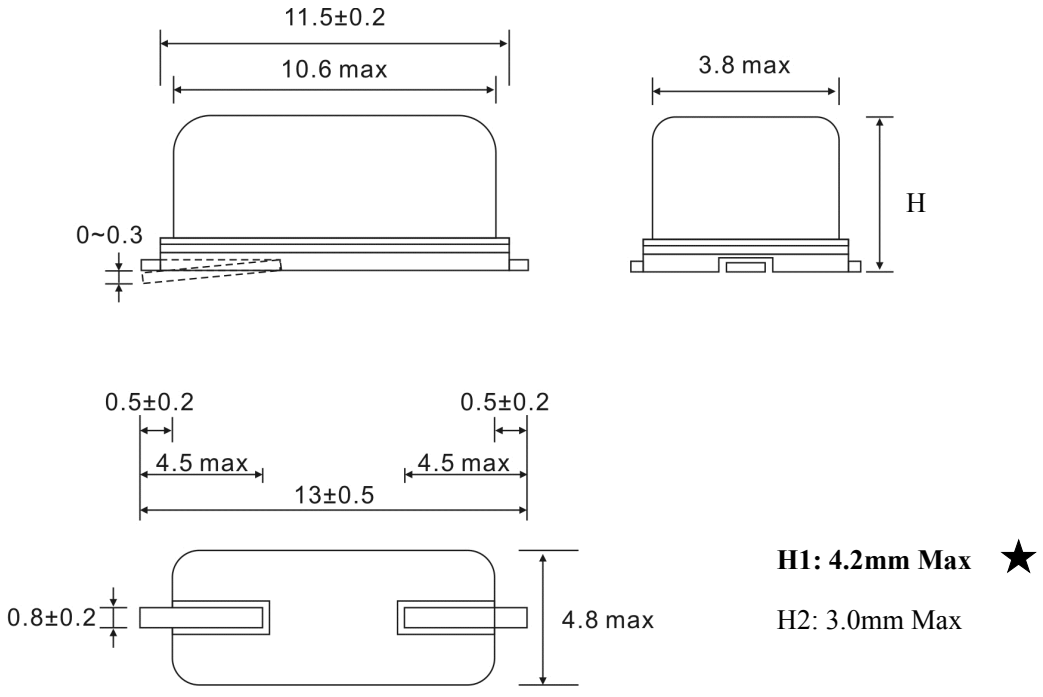

H1: 4.2mm Max ★

H2: 3.0mm Max

5.回流焊曲线 Reflow Profiles

Profiles Feature	Pb-Free Assembly
Average Ramp-up Rate (Ts max to Tp)	3℃/second max.
Preheat Temperature Min (Ts min) Temperature Max(Ts max) Time (ts min to ts max)	 125℃ 200℃ 60~180 seconds
Time maintained above Temperature (TL) Time (tL)	 217℃ 60~150 seconds
Peak/Classification Temperature (Tp)	
Time within 5℃ of actual Peak Temperature(tp)	20～40 second
Ramp-down rate	6℃/second max.
Time 25℃ to Peak Temperature	8 minutes max.
Suggest reflow times	3 times max.

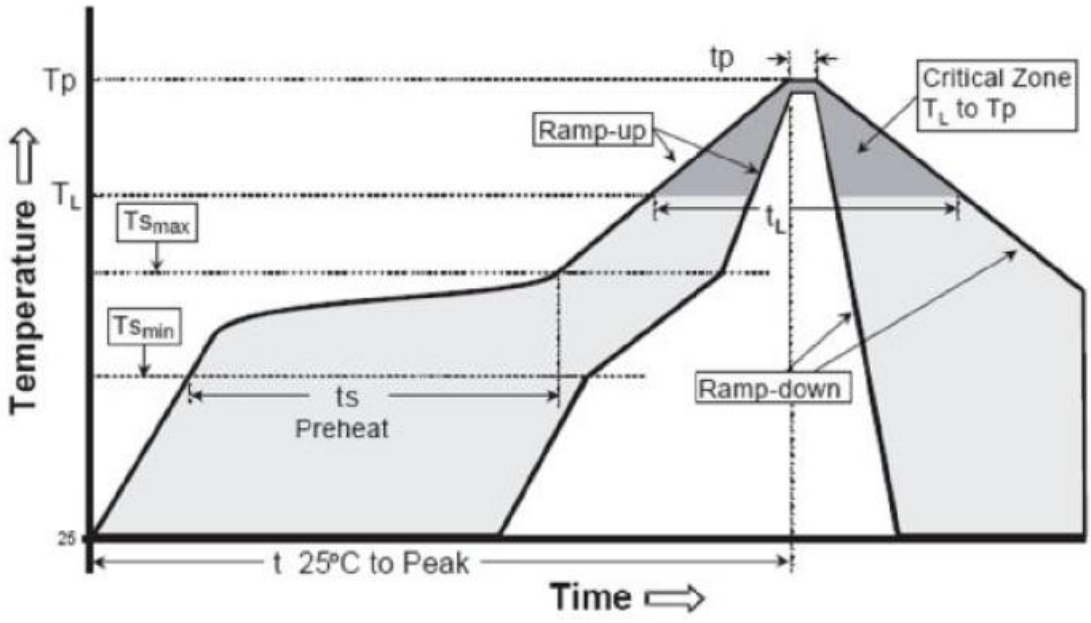

6.机械可靠/信赖性 Mechanical Performance

	Item	Condition	Standard
1.	Drop characteristics	Free drop from 50cm height on a hard wooden board for 3 times. (Board is thickness more than 30 mm.)	Frequency change: ≤5ppm Rr as specification
2..	Shake characteristics	Shake frequency 10~55Hz, cyc1~2 minutes, swing 1.5mm, direction x/y/z, all 30 minutes, test after 1 hours.	Frequency change: ≤5ppm Rr as specification
3.	Airproof characteristics	Put crystal into the pressure cabin with alcohol, keep pressure 0.4~0.5mpa 10 minutes, then take out and blow for 5 minutes	IR≥500MΩ
4.	Weld characteristics	260℃ Max, 10 seconds	90% exhibit tin ok
5.	Humidity characteristics	+40±2℃ & 90%~95% R.H. 250 hours	Frequency change: ≤5ppm Rr as specification
6.	Low temperature characteristics	-30±2℃, 250 hours, put in room temperature, test after 1 hours.	Frequency change: ≤5ppm Rr as specification
7.	High temperature characteristics	+85±2℃, 250 hours, put in room temperature, test after 1 hours.	Frequency change: ≤5ppm Rr as specification
8.	Temperature cycling	-30±3℃/30±3 min~+85±2℃/30±3min, 5 cycles	Frequency change: ≤5ppm Rr as specification

7.Dimension of Inside Package

内包装尺寸图

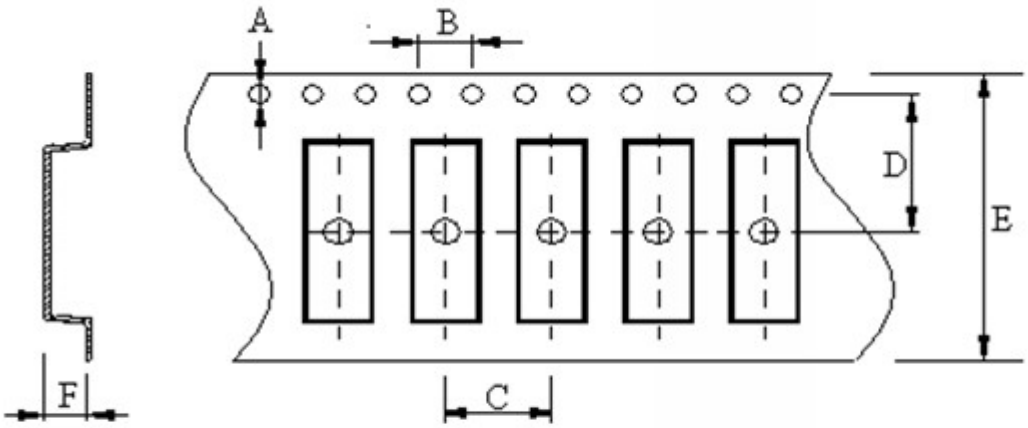

A	B	C	D	E	F
1.55±0.1	4.0±0.1	12.0±0.1	11.5±0.1	24.0±0.3	3.5±0.2

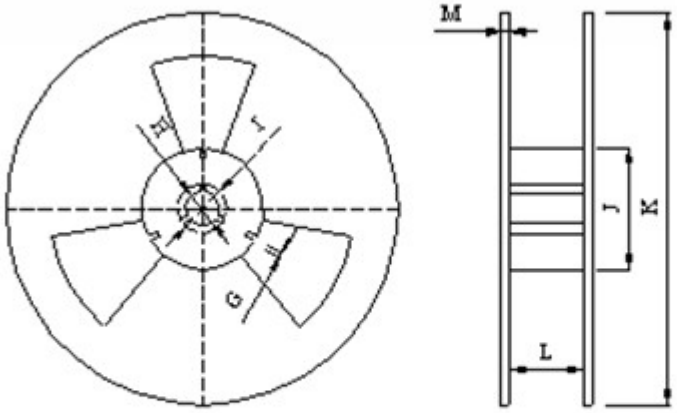

G	H	I	J	K	L	M
2.2±0.5	13.0±0.2	20.2±1.0	100.0±1.0	330±2.0	24.5±0.3	2.3±0.5

8.包装 PACKING

1. 每 盘 数 量 Capacity of a plastic reel : 1000 PCS ;
2. 每内箱数量 Capacity per inner box : 1000 PCS (A reel inner) ;
3. 每大箱数量 Capacity per outer carton : 10000 PCS (10×inner box) .

