Features

♦ 5000W peak pulse power capability at 10/1000 μ s waveform, repetition rate (duty cycles):0.01%

♦Low clamping capability **nCLAMP™**

♦Typical failure mode is a short circuit condition for current events exceeding component rating

♦Plastic package is flammability rated V-0 per UL-94

♦Meet MSL level1, per J-STD-020, lead-frame maximum peak of 260° C

Applications

This low clamp TVS series are ideal for the transient voltage clamp protection of I/O Interfaces, DC power line bus and other circuits used in Telecom electronic applications

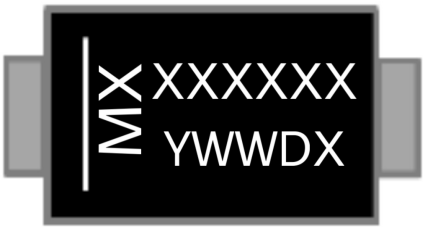

Function Diagram

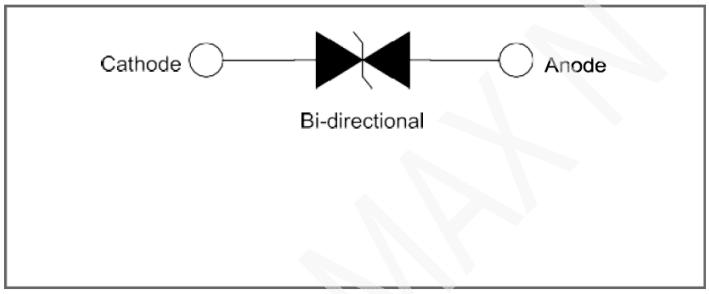

Maximum Ratings and Thermal Characteristics (TA=25℃ unless otherwise noted)			
Parameter	Symbol	Value	Unit
Peak Pulse Power Dissipation at TA=25ºC by 10/1000μs Waveform	P_{PPM}	5000	W
Power Dissipation on Infinite Heat Sink at TL=50℃	P_D	6.5	W
Operating Temperature Range	T_J	-55 to 150	℃
Storage Temperature Range	T_{STG}	-55 to 150	℃

Notes:

1. Measured on 8.3ms single half sine wave or equivalent square wave for unidirectional device only, duty cycle=4 per minute maximum.

Characteristics (T =25°C unless otherwise noted)

Part Number (Bi)	Key Marking	Reverse Stand off Voltage V_R (Volts)	Breakdown Voltage V_{BR} (Volts) @ I_T		Test Current I_T (mA)	Maximum Clamping Voltage V_C @ I_{pp} (V)	Maximum Peak Pulse Current I_{pp} (A)10/1000 uS	Maximum Clamping Voltage V_C @ I_{pp} (V)	Maximum Peak Pulse Current I_{pp} (A)8/20uS	Maximum Reverse Leakage I_R @ V_R (μA)
			MIN	MA						
5.0SMDJ58CA-FL	5D058n	58	64.4	71.2	1	74	71.4	82	1000	2
5.0SMDJ64CA-FL	5D064n	64	71.1	78.6	1	83	60.2	88	910	2
5.0SMDJ70CA-FL	5D070n	70	77.8	86.0	1	91	55.0	96	830	2
5.0SMDJ78CA-FL	5D078n	78	86.7	95.8	1	101	49.5	107	740	2
5.0SMDJ85CA-FL	5D085n	85	94.4	104.0	1	109	40.15	114	480	2
5.0SMDJ90CA-FL	5D090n	90	100.0	111.0	1	117	34.3	122	425.5	2

I-V Curve Characteristics

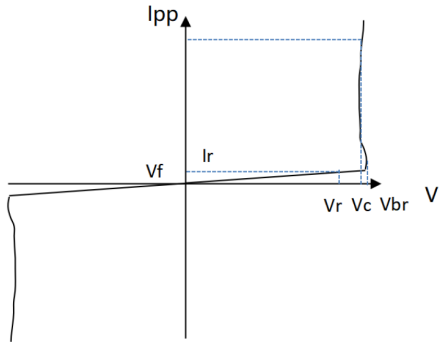

P_{PPM} Peak Pulse Power Dissipation -- Max power dissipation

V_R Stand-off Voltage -- Maximum voltage that can be applied to the TVS without operation

V_{BR} Breakdown Voltage -- Maximum voltage that flows though the TVS at a specified test current (I_T)

V_C Clamping Voltage -- Peak voltage measured across the TVS at a specified IPPM (peak impulse current) I_R Reverse Leakage Current -- Current measured at V_R

MAXIN MICRO

Ratings and Characteristic Curves (T =25°C unless otherwise noted)

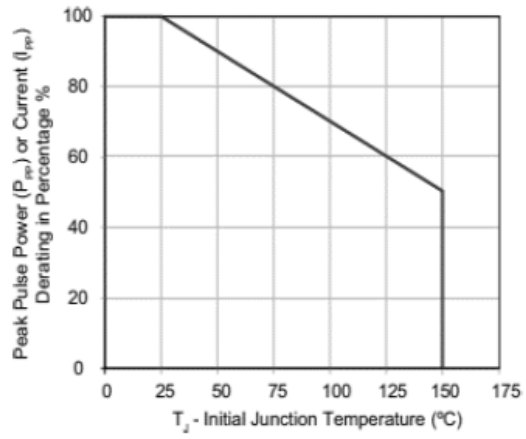

Figure 1. Peak pulse power derating curve

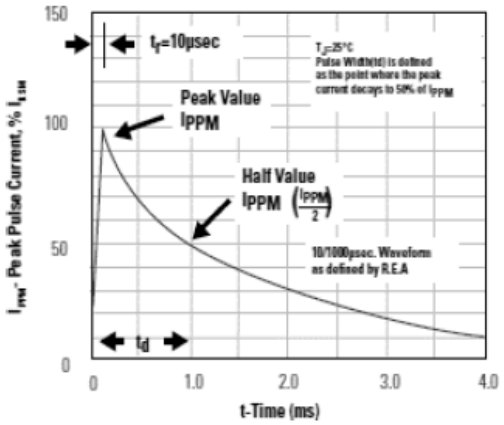

Figure2. Pulse waveform

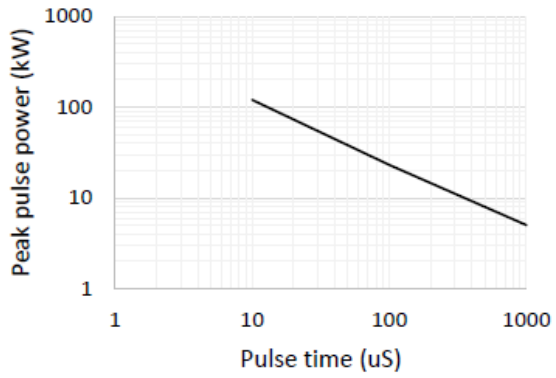

Figure 3. Peak pulse power rating curve

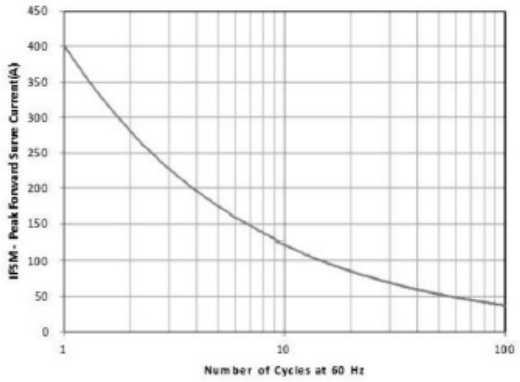

Figure 4. Maximum non-repetitive surge current

Soldering Parameters

Reflow Condition		Lead–free assembly
Pre Heat	- Temperature Min ($T_{s(min)}$)	150°C
	- Temperature Max ($T_{s(max)}$)	200°C
	- Time (min to max) (t_s)	60 – 120 secs
Average ramp up rate (Liquidus Temp (T_A) to peak		3°C/second max
$T_{S(max)}$ to T_A - Ramp-up Rate		3°C/second max
Reflow	- Temperature (T_A) (Liquidus)	217°C
	- Time (min to max) (t_s)	60 – 150 seconds
Peak Temperature (T_P)		$260^{+0/-5}$°C
Time within 5°C of actual peak Temperature (t_p)		20 – 40 seconds
Ramp-down Rate		6°C/second max
Time 25°C to peak Temperature (T_P)		8 minutes Max.
Do not exceed		260°C

Soldering profile

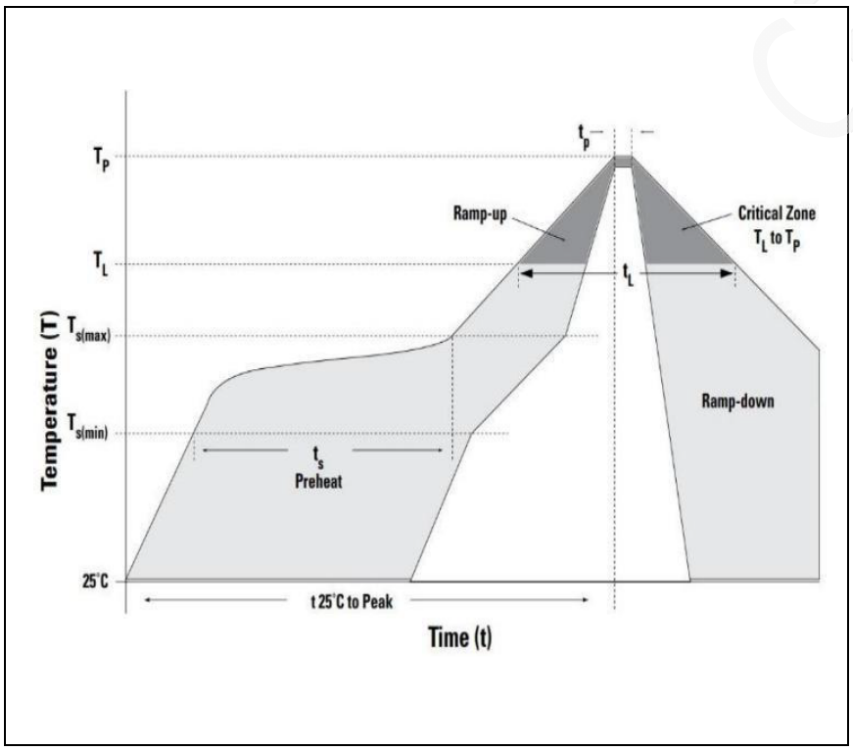

Dimensions

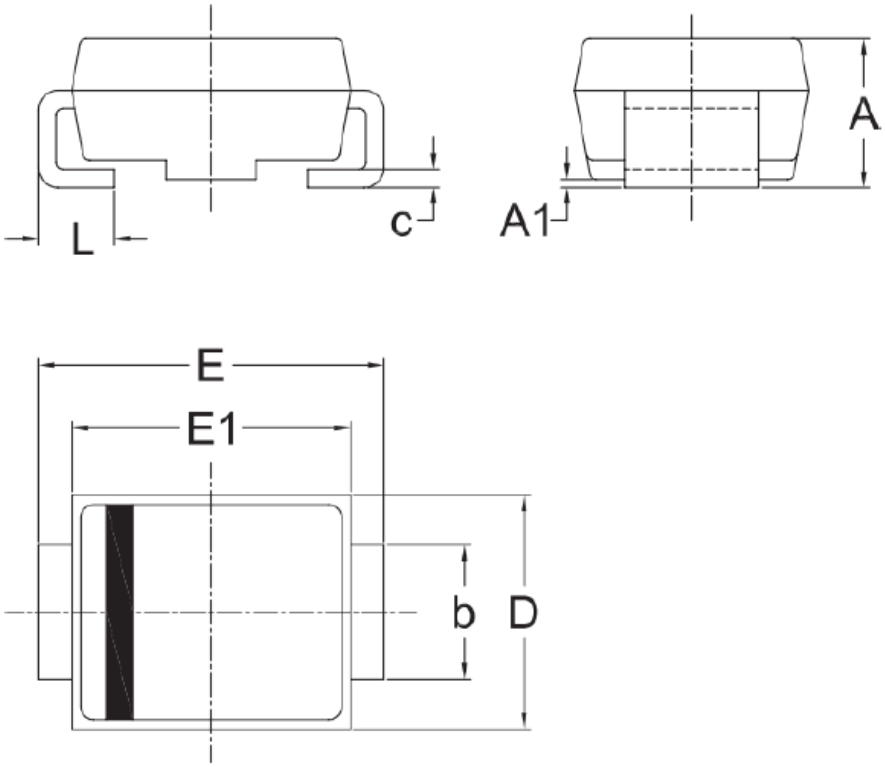

Unit		A	A1	b	c	D	E	E1	L
mm	MAX	2.83	0.30	3.10	0.25	6.15	8.15	7.05	1.60
	MIN	2.33	0.00	2.80	0.15	5.85	7.65	6.75	0.90

Remark :Dimensions D and E1 do not include mold flash & gate remain.

Part Numbering

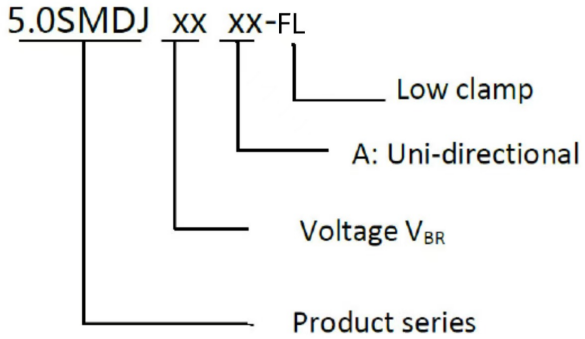

Part Marking

Product Type Marking Code

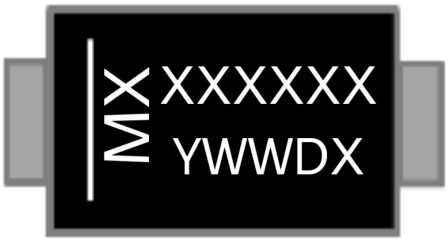

Cathode band
(for uni-directional produets only)

Packing

Part number	Package name	Small packing quantity	Packing method
5.0SMDJXXXX-FL	DO-214AB	3000	Tape & Reel

Tape and Reel Specification

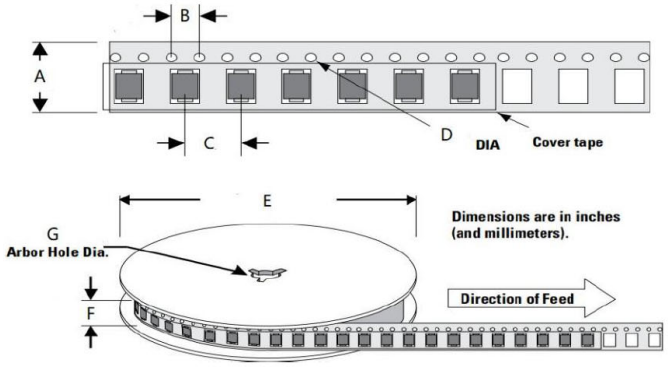

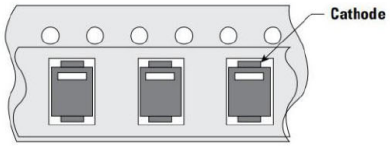

Symbol	Millimeter
A	16.00±0.10
B	4.00±0.10
C	8.00±0.10
D	1.55±0.05
E	330.20±2.00
F	19.70±2.00
G	13.30±0.30

Revision history of Specification

Version	Change Items	Effective Date
1.0	Initial Release	8-18-2022