This document is the property of Amphenol Corporation and is delivered on the express condition that it is not to be disclosed, reproduced or used, in whole or in part, for manufacture or sale by anyone other than Amphenol Corporation without its prior concert, & that no right is granted to disclose or to use any information in this document.

REVISIONS				
SYM	ECN	DESCRIPTION	DATE	APPROVED
1			10/10/07	

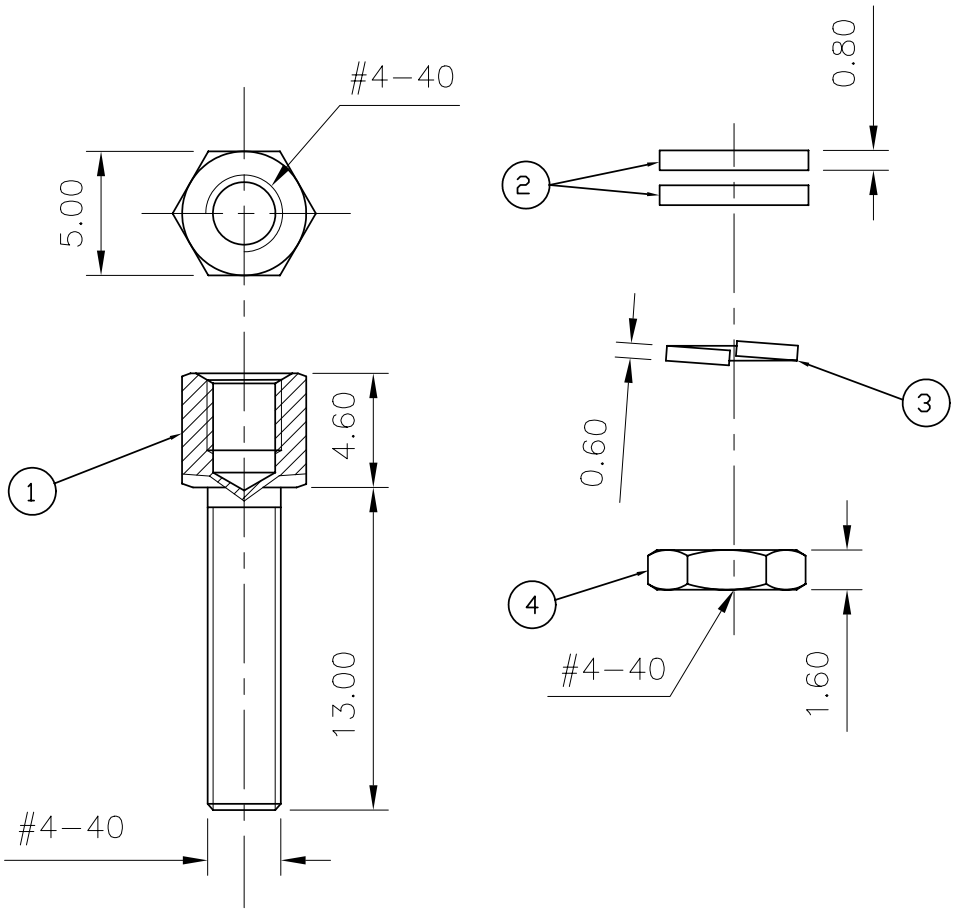

1. SCREW
2. WASHERS
3. LOCK WASHER
4. NUT

D-SUB TECHNICAL DATA

MATERIAL:

Screwlock: steel,100u" min tin over 50u" min nickel.

Washer: steel,100u" min tin over 50u" min nickel.

Lock washer: XC 35

Nut: steel,100u" min tin over 50u" min nickel.

PACKAGE:

Delivered separately

1 P/N = 10 sets

MARKING:

Amphenol-...(Series No.) Commercial reference

Manufacturing date

UNLESS OTHERWISE SPECIFIED TOLERANCES	U.S.	METRIC	APPROVAL	DATE
.X +/-		0.50	DRAWN Christine.cui	10/10/07
.XX +/-		0.30	CHECKED lik.wang	10/10/07
.XXX +/-		0.20	CHECKED	
FRACTIONS +/-				
ANGLES +/-		2°		
FOR MATERIALS AND FINISHES SEE NOTES			DRAWING FILE :	
REMOVE SHARP EDGES			ANGLE OF PROJECTION	
DIMENSIONS				
U.S.	INCHES			
METRIC	MM			

Amphenol

TITLE: Accessory, screwlock with nut and washers

SIZE	DRAWING NO.	REV.
A4	C L17D204182LX	1

SCALE NONE SHEET 1 OF 1