MBRF2065CT

SCHOTTKY BARRIER RECTIFIER

■ DESCRIPTION

The MBR2065CT meet the ROHS and Green Product requirement with full function reliability approved.

■ FEATURE

*High Surge Capacity
*For Use In Low Voltage,High Frequency Inverters, Free Wheeling and Polarity Protection Applications.
*Metal Silicon Junction,Majority Carrier Conduction.
*High Current Capacity,Low Forward Voltage Drop.
*Guard Ring for Over Voltage Protection.



1. ANODE
2. CATHODE
3. ANODE

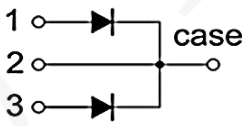

■ ABSOLUTE MAXIMUM RATINGS(TA=25°C, unless otherwise specified.)

SYMBOL	PARAMETER	VALUE	UNIT
V_{RRM}	Peak repetitive reverse voltage	65	V
V_{RWM}	Working peak reverse voltage	65	V
V_R	DC blocking voltage	65	V
$V_{R(RMS)}$	RMS reverse voltage	45.5	V
I_O	Average rectified output current	20（10*2）	A
I_{FSM}	Non-Repetitive peak forward surge current	150*2	A
Tj	Junction temperature	150	°C
Tstg	Storage temperature	-55 ~ +150	°C
$R_{\theta JA}$	Thermal Resistance fromJunction to Ambient	58	°C/W
$R_{\theta JC}$	Thermal Resistance From Junction To Case	3	°C/W

Notes: Absolute maximum ratings are those values beyond which the device could be permanently damaged. Absolute maximum ratings are stress ratings only and functional device operation is not implied.

Shenzhen DingDeFeng Technology Co., Ltd Tel: +86-755-83677999

■ ELECTRICAL CHARACTERISTICS (TA=25°C, unless otherwise specified)

PARAMETER	SYMBOL	TEST CONDITIONS		MIN	TYP	MAX	UNIT
Reverse voltage	$V_{(BR)}$	I_R=0.1mA		65			V
Reverse current	I_R	V_R=65V	Tj =25℃			50	uA
			Tj =125℃		5.0		mA
Forward voltage	V_F	I_F=5A	Tj =25℃		0.60		V
			Tj =125℃		0.54		V
		I_F=10A	Tj =25℃		0.72	0.75	V
			Tj =125℃		0.62		V
*Pulse test: pulse width ≤300μs, duty cycle≤ 2.0%							

■ TYPICAL CHARACTERISTICS

FIG.1: FORWARD CURRENT DERATING CURVE

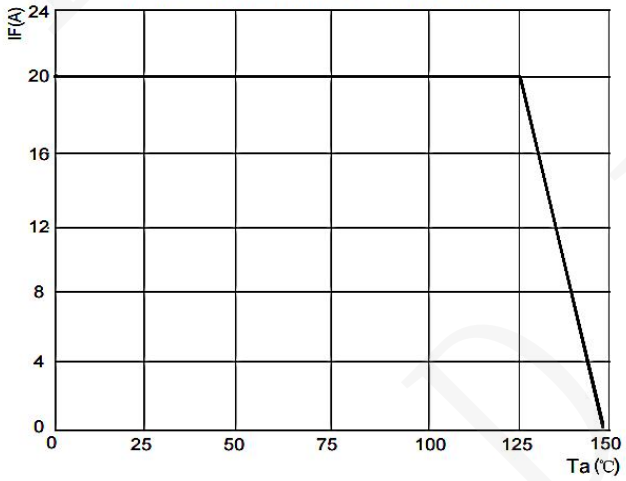

FIG.2: TYPICAL FORWARD CHARACTERISTICS

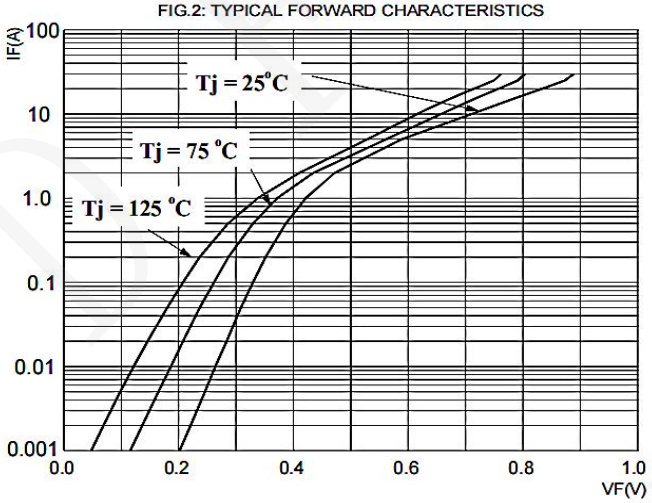

FIG.3: TOTAL CAPACITANCE DERATING CURVE



FIG.4: TYPICAL REVERSE CHARACTERISTICS

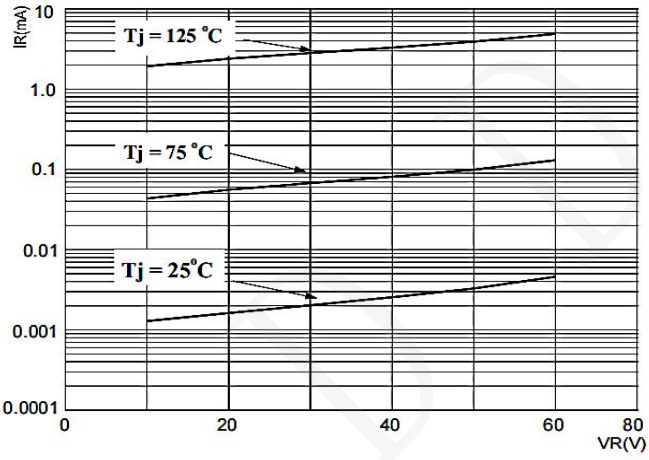

■ TO- 220F PACKAGE OUTLINE DIMENSIONS

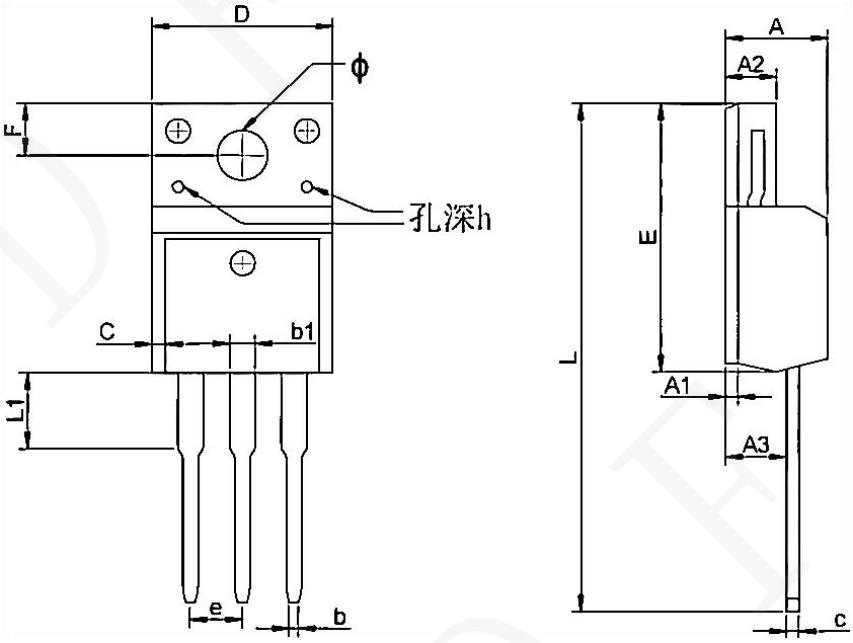

Symbol	Dimensions In Millimeters		Dimensions In Inches	
	Min.	Max	Min	Max
A	4.300	4.750	0.169	0.185
A1	1.830 REF		0.072 REF	
A2	2.300	2.850	0.090	0.112
A3	2.500	2.900	0.098	0.114
b	0.400	0.420	0.016	0.016
b1	1.220	1.280	0.048	0.050
C	0.690	0.720	0.027	0.028
c	0.490	0.510	0.019	0.020
D	9.960	10.200	0.392	0.400
E	15.000	15.950	0.588	0.625
e	2.574 TYP		0.101TYP	
F	3.470 REF		0.136 REF	
y	3.200 REF		0.125 REF	
h	0.000	0.300	0.000	0.012
L	28.780	28.900	1.128	1.133
L1	2.990	3.100	0.117	0.122