鼎德丰 DING DE FENG

MBRF3065CT

SCHOTTKY BARRIER RECTIFIER

■ DESCRIPTION

The MBR3065CT meet the ROHS and Green Product requirement with full function reliability approved.

■ FEATURE

*Schottky Barrier Chip
*Guard Ring Die Construction for Transient Protection
*Low Power Loss,High Efficiency
*High Surge Capability
*High Current Capability and Low Forward Voltage Drop
*For Use in Low Voltage, High Frequency Inverters,Free Wheeling, and Polarity Protection Applications



1. ANODE
2. CATHODE
3. ANODE

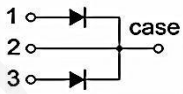

■ ABSOLUTE MAXIMUM RATINGS(TA=25°C, unless otherwise specified.)

Symbol	Parameter	VALUE	Unit
V_{RRM}	Peak repetitive reverse voltage	65	V
V_{RWM}	Working peak reverse voltage		
V_R	DC blocking voltage		
$V_{R(RMS)}$	RMS reverse voltage	45.5	V
I_O	Average rectified output current	30（15*2）	A
I_{FSM}	Non-Repetitive peak forward surge current (8.3ms half sine wave)	200*2	A
$R_{\Theta J}$	Thermal resistance from junction to case ,Tc=25℃	3.0	℃/W
$R_{\Theta J}$	hermal resistance from junction to ambient	62.5	℃/W
T_j	Junction temperature	150	℃
T_{stg}	Storage temperature	-55~+150	℃

Notes: Absolute maximum ratings are those values beyond which the device could be permanently damaged. Absolute maximum ratings are stress ratings only and functional device operation is not implied.

Shenzhen DingDeFeng Technology Co., Ltd Tel: +86-755-83677999

■ ELECTRICAL CHARACTERISTICS (TA=25°C, unless otherwise specified)

Parameter	Symbol	Test conditions		Min	Typ	Max	Unit
Reverse voltage	$V_{(BR)}$	I_R=0.1mA		65			V
Reverse current	I_R	V_R=65V	Tj =25℃		5.0	100	uA
			Tj =125℃		5.0		mA
Forward voltage	V_F	I_F=10A	Tj =25℃		0.70	0.75	V
			Tj =125℃		0.58		V
		I_F=15A	Tj =25℃		0.5	0.85	V
			Tj =125℃		0.65		V
*Pulse test: pulse width ≤300μs, duty cycle≤ 2.0%.							

■ TYPICAL CHARACTERISTICS

FIG.1 MAXIMUM FORWARD CURRENT DERATING CURVE

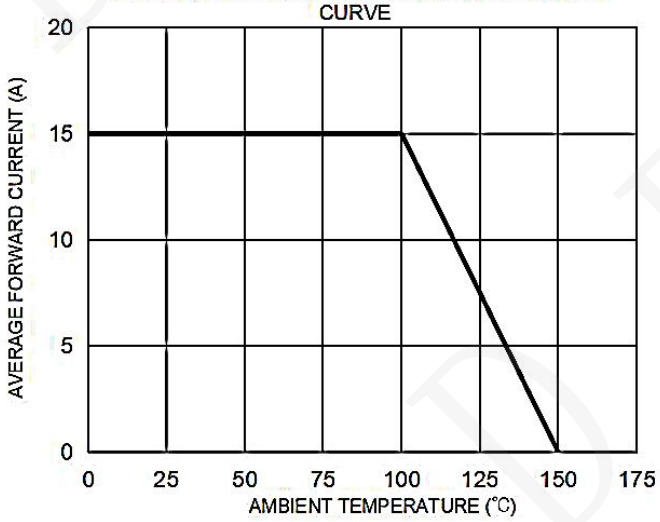

FIG. 2 MAXIMUM NON-REPETITIVE FORWARD SURGE CURRENT PER LEG

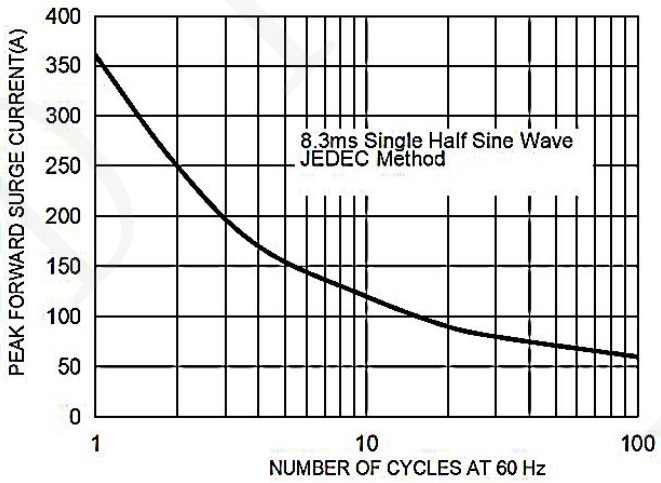

FIG. 3 TYPICAL FORWARD CHARACTERISTICS PER LEG

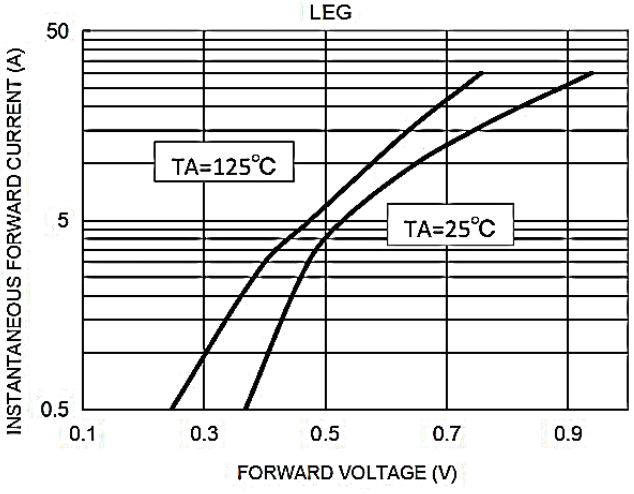

FIG. 4 TYPICAL REVERSE CHARACTERISTICS PER LEG

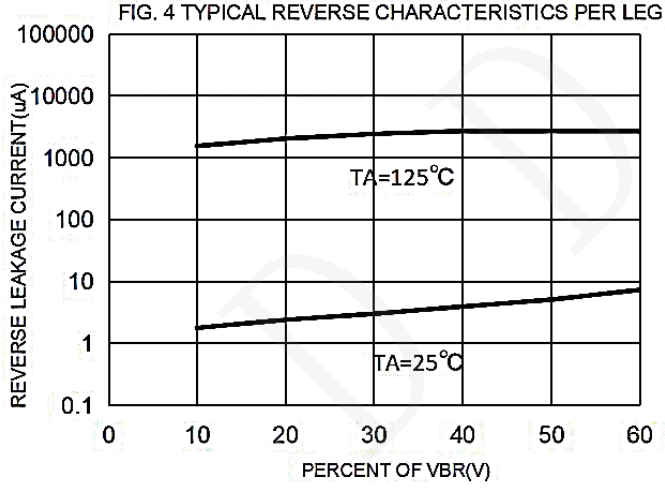

■ TO- 220F PACKAGE OUTLINE DIMENSIONS

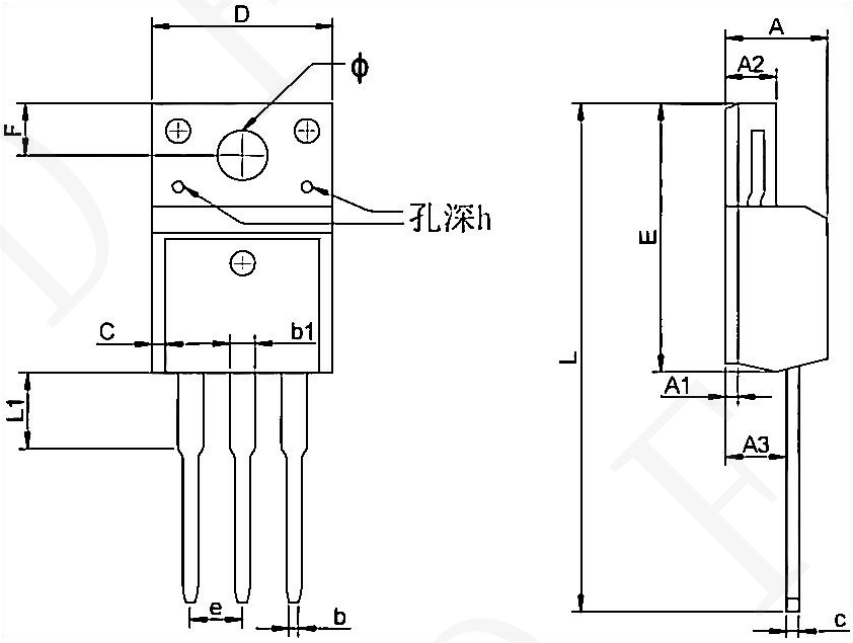

Symbol	Dimensions In Millimeters		Dimensions In Inches	
	Min.	Max	Min	Max
A	4.300	4.750	0.169	0.185
A1	1.830 REF		0.072 REF	
A2	2.300	2.850	0.090	0.112
A3	2.500	2.900	0.098	0.114
b	0.400	0.420	0.016	0.016
b1	1.220	1.280	0.048	0.050
C	0.690	0.720	0.027	0.028
c	0.490	0.510	0.019	0.020
D	9.960	10.200	0.392	0.400
E	15.000	15.950	0.588	0.625
e	2.574 TYP		0.101TYP	
F	3.470 REF		0.136 REF	
y	3.200 REF		0.125 REF	
h	0.000	0.300	0.000	0.012
L	28.780	28.900	1.128	1.133
L1	2.990	3.100	0.117	0.122