MBRF40100CT

SCHOTTKY BARRIER RECTIFIER

■ DESCRIPTION

The MBR40100CT meet the ROHS and Green Product requirement with full function reliability approved.

■ FEATURE

*Guard Ring Die Construction for Transient Protection
*Low Power Loss,High Efficiency
*High Current Capability and Low Forward Voltage Drop





■ ABSOLUTE MAXIMUM RATINGS(TA=25°C, unless otherwise specified.)

SYMBOL	PARAMETER		VALUE	UNIT
V_{RRM}	Peak repetitive reverse voltage		100	V
V_{RWM}	Working peak reverse voltage			V
V_R	DC blocking voltage			V
$V_{R(RMS)}$	RMS reverse voltage		70	V
I_O	Average rectified output current	Per Leg	20	A
		Total	40	
I_{FSM}	Non-Repetitive peak forward surge current(8.3ms half sine wave)		250*2	A
T_j	Junction temperature		175	°C
Tstg	Storage temperature		-55~+150	°C
$R_{\theta JA}$	Thermal Resistance fromJunction to Ambient		62.5	°C/W
$R_{\theta JC}$	Thermal Resistance From Junction To Case		3	°C/W

Notes: Absolute maximum ratings are those values beyond which the device could be permanently damaged. Absolute maximum ratings are stress ratings only and functional device operation is not implied.

Shenzhen DingDeFeng Technology Co., Ltd Tel: +86-755-83677999

■ ELECTRICAL CHARACTERISTICS (TA=25°C, unless otherwise specified)

PARAMETER	SYMBOL	TEST CONDITIONS		MIN	TYP	MAX	UNIT
Reverse voltage	$V_{(BR)}$	I_R=0.1mA		100			V
Reverse current	I_R	V_R=100V	Tj=25℃		20	100	μA
			Tj=125℃		20		mA
Forward voltage	V_F	I_F=10A	Tj=25℃		0.53		V
			Tj=125℃		0.50		V
		I_F=20A	Tj=25℃		0.67	0.72	V
			Tj=125℃		0.64		V

Notes: 1.Pulse test: pulse width ≤300μs, duty cycle≤ 2.0%.

■ TYPICAL CHARACTERISTICS

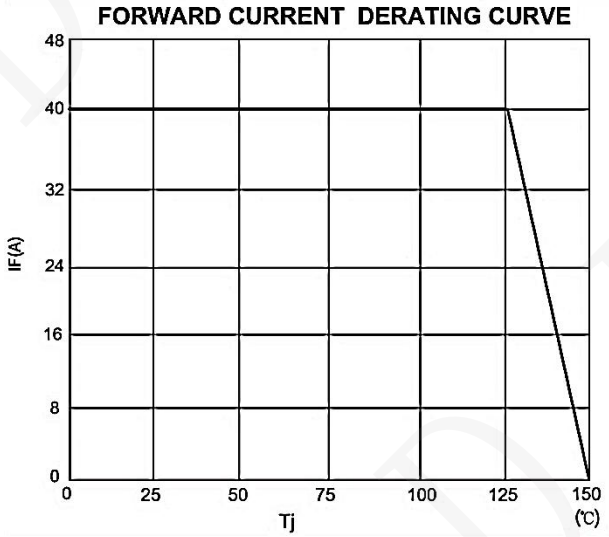

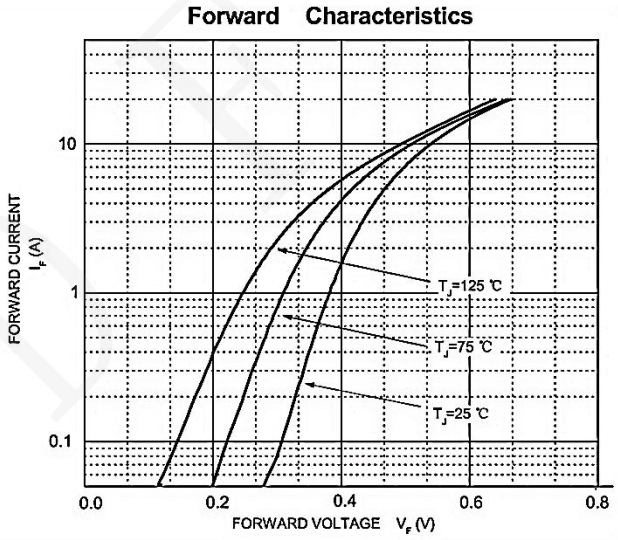

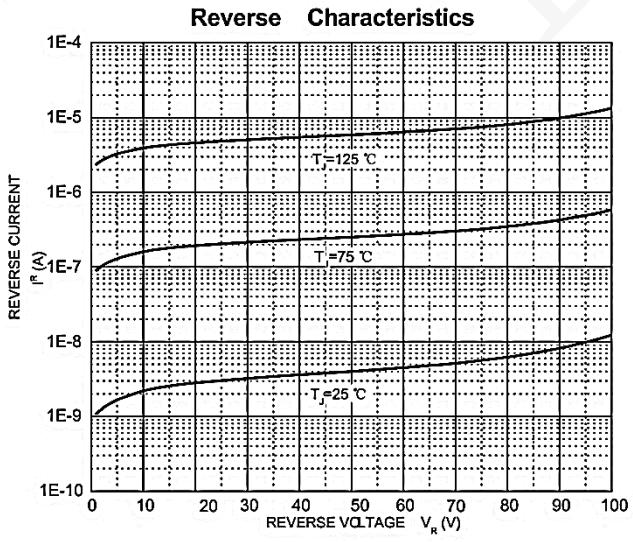

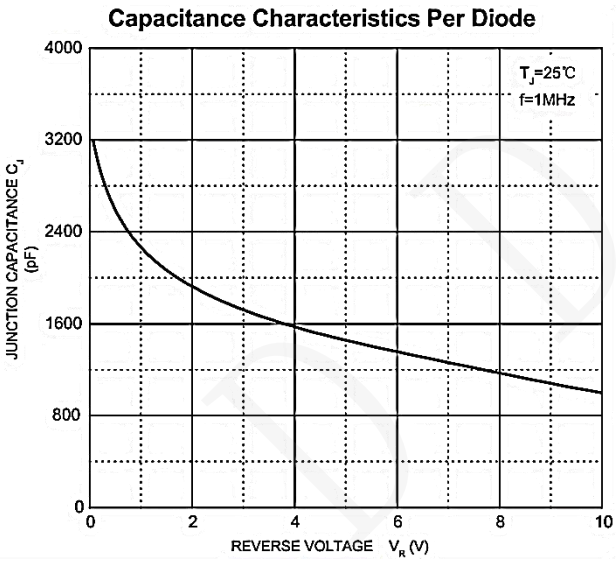

■ TO- 220F PACKAGE OUTLINE DIMENSIONS

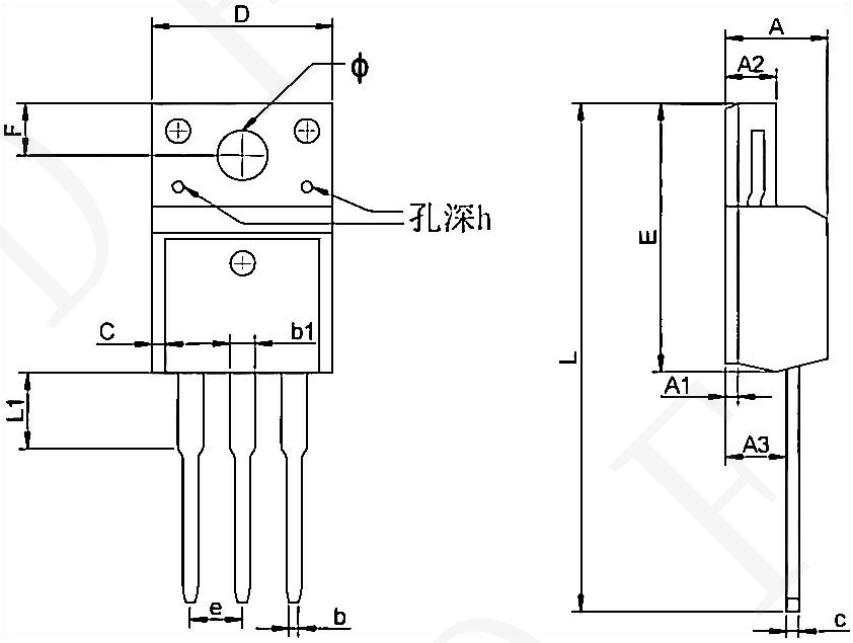

Symbol	Dimensions In Millimeters		Dimensions In Inches	
	Min.	Max	Min	Max
A	4.300	4.750	0.169	0.185
A1	1.830 REF		0.072 REF	
A2	2.300	2.850	0.090	0.112
A3	2.500	2.900	0.098	0.114
b	0.400	0.420	0.016	0.016
b1	1.220	1.280	0.048	0.050
C	0.690	0.720	0.027	0.028
c	0.490	0.510	0.019	0.020
D	9.960	10.200	0.392	0.400
E	15.000	15.950	0.588	0.625
e	2.574 TYP		0.101TYP	
F	3.470 REF		0.136 REF	
y	3.200 REF		0.125 REF	
h	0.000	0.300	0.000	0.012
L	28.780	28.900	1.128	1.133
L1	2.990	3.100	0.117	0.122