MBRF40200CT

SCHOTTKY BARRIER RECTIFIER

■ DESCRIPTION

The MBR40200CT is a Schottky Barrier Rectifier with high efficiency, low power dissipation and high current capacity. It can be applied in low voltage, high frequency inverters, polarity protection and free wheeling applications.

The MBR40200CT meet the ROHS and Green Product requirement with full function reliability approved.

■ FEATURE

*High Surge Capability

*High efficiency, low power dissipation, high current capability, low forward voltage drop



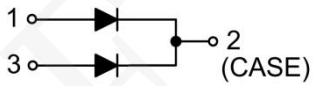

■ ABSOLUTE MAXIMUM RATINGS(TA=25°C, unless otherwise specified.)

PARAMETER		SYMBOL	RATINGS	UNIT
Recurrent Peak Reverse Voltage		VRRM	200	V
RMS Voltage		VR(RMS)	140	V
DC Blocking Voltage		VR	200	V
Average Forward Rectified Output Current (TC=105°C)	Per Leg	Io	20	A
	Total		40	
DC Reverse Current	TC=25°C	IR	0.5	mA
	TC=100°C		30	mA
Peak Repetitive Forward Current (Rated VR, Square Wave, 20 kHz) (TC=135°C)		IFRM	40	A
Non-Repetitive Peak Forward Surge Current 8.3ms Single Half-Sine-Wave		IFSM	180*2	A
Peak Repetitive Reverse Surge Current (Note 3)		IRRM	1.0	A
Voltage Rate of Change (Rated VR)		dv/dt	10000	V/μs
Junction Capacitance (Note 4)		CJ	150	pF
Operating Junction Temperature		TJ	175	°C
Storage Temperature		TSTG	-55 ~ +150	°C

■ THERMAL DATA (PER LEG)

PARAMETER		SYMBOL	RATING	UNIT
Junction to Case	TO-220F	θJC	4	°C/W

■ ELECTRICAL CHARACTERISTICS (TA=25°C, unless otherwise specified)

PARAMETER	SYMBOL	TEST CONDITIONS	MIN	TYP	MAX	UNIT
Instantaneous Forward Voltage Drop	VF	IF=20A, TC=25°C		0.87	0.92	V
		IF=20A, TC=125°C		0.75	0.85	V
		IF=40A, TC=25°C		0.99	1.04	V
		IF=40A, TC=125°C		0.90	0.95	V
Instantaneous Reverse Current	IR	Rated DC Voltage, TC=25°C			2.5	μA
		Rated DC Voltage, TC=125°C			10	mA

Notes: 1.Absolutemaximumratingsarethosevaluesbeyondwhichthedevicecouldbepermanentlydamaged.
Absolutemaximumratingsarestressratingsonlyandfunctionaldeviceoperationisnotimplied.
2.2.0μsPulseWidth,f=1.0KHz.
3.PulseTest:PulseWidth=300μs,DutyCycle≤2.0%.
4.Applied VF=4.0Vandf=1.0MHz.

■ TYPICAL CHARACTERISTICS

FIG. 1 - FORWARD DERATING CURVE

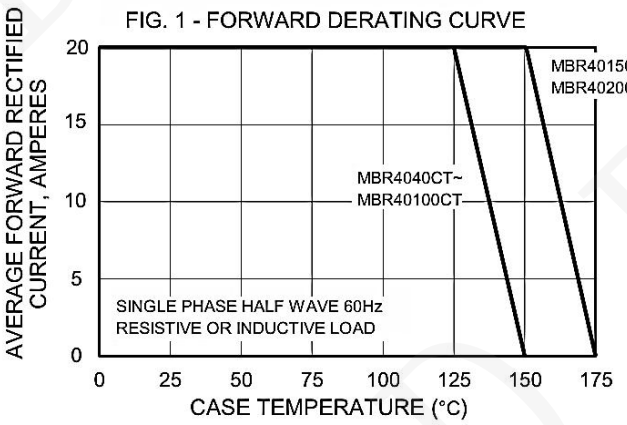

FIG. 2 - MAXIMUM NON-REPETITIVE FORWARD SURGE CURRENT

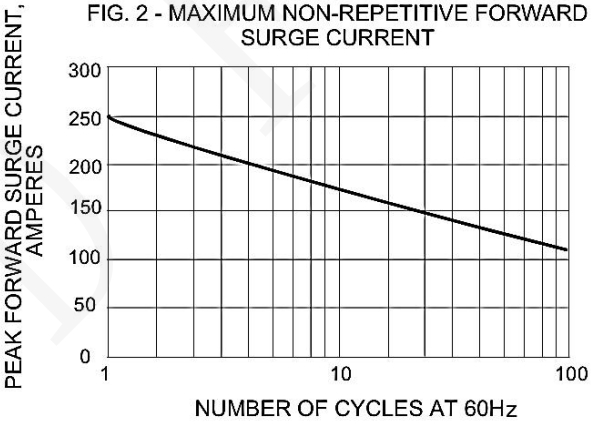

FIG. 3 - TYPICAL REVERSE CHARACTERISTICS

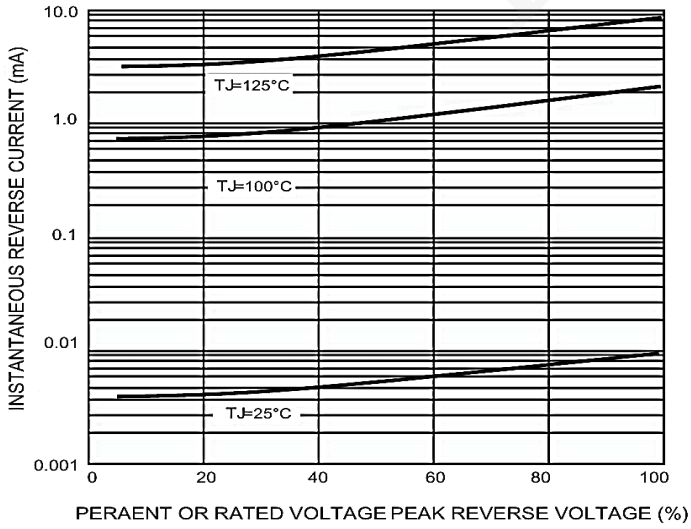

FIG. 4 - TYPICAL FORWARD CHARACTERISTIC PER LEG

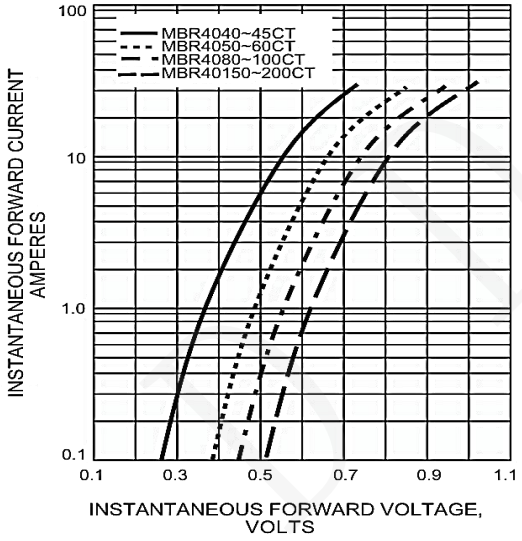

■ TO- 220F PACKAGE OUTLINE DIMENSIONS

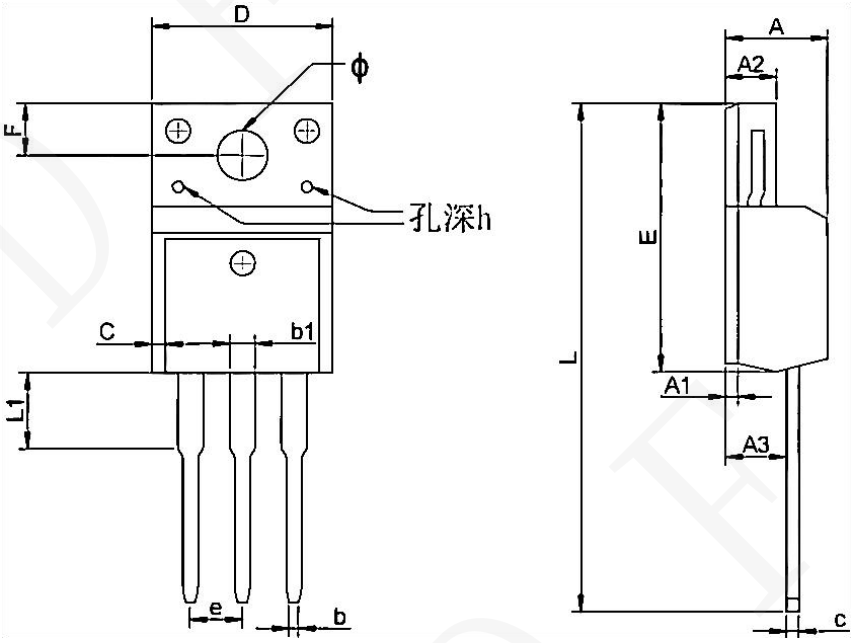

Symbol	Dimensions In Millimeters		Dimensions In Inches	
	Min.	Max	Min	Max
A	4.300	4.750	0.169	0.185
A1	1.830 REF		0.072 REF	
A2	2.300	2.850	0.090	0.112
A3	2.500	2.900	0.098	0.114
b	0.400	0.420	0.016	0.016
b1	1.220	1.280	0.048	0.050
C	0.690	0.720	0.027	0.028
c	0.490	0.510	0.019	0.020
D	9.960	10.200	0.392	0.400
E	15.000	15.950	0.588	0.625
e	2.574 TYP		0.101TYP	
F	3.470 REF		0.136 REF	
y	3.200 REF		0.125 REF	
h	0.000	0.300	0.000	0.012
L	28.780	28.900	1.128	1.133
L1	2.990	3.100	0.117	0.122