1 FEATURES

- 4.5V to 18V input voltage
- Output adjustable from 0.6V to 12V
- Output current up to 3A
- Integrated 90mΩ/60mΩ power MOSFET switches
- Shutdown current 7μA typical
- Efficiency up to 97%
- 500KHz Frequency Operation
- Advanced COT Control to Achieve Fast Transient Responses
- Integrated internal compensation
- Stable with Low ESR Ceramic Output Capacitors
- Over Current Protection with Hiccup Mode
- Thermal Shutdown
- Inrush Current Limit and Soft Start
- Build in Input Over Voltage Protection
- Available in SOT23-6 Package

2 APPLICATIONS

- Digital Set Top Boxes
- Flat Panel Television and Monitors
- Notebook computer
- Industrial Power Systems
- Wireless and DSL Modems

3 DESCRIPTION

The HM81832Y is a high efficiency 500kHz, Advanced Constant-on-time (COT) control mode synchronous step-down DC-DC converter capable of delivering up to 3A current.

HM81832Y integrates main switch and synchronous switch with very low $R_{DS(ON)}$ to minimize the conduction loss. Low output voltage ripple and small external inductor and capacitor size are achieved with 500kHz switching frequency. It adopts the COT architecture to achieve fast transient responses.

The HM81832Y requires a minimum number of readily available standard external components and is available in a space saving SOT23-6 compliant package.

TYPICAL APPLICATION

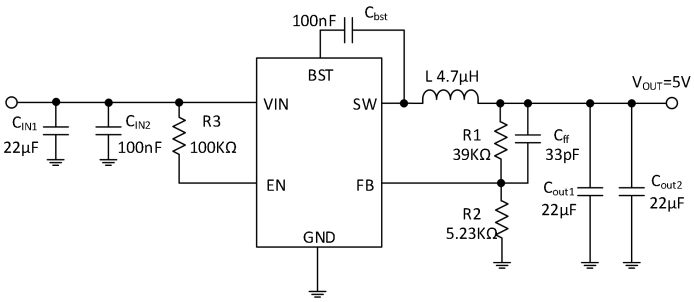

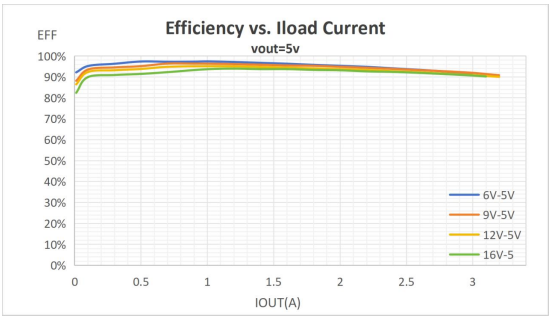

EFFICIENCY

Copyright © GATEMODE Corp.

4 PIN CONFIGURATION AND FUNCTIONS

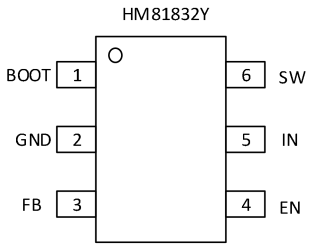

Pin	Symbol	Description
1	BOOT	Bootstrap. A capacitor connected between SW and BOOT pins is required to form a floating supply across the high-side switch driver.
2	GND	Ground Pin
3	FB	Output Voltage feedback input. Connect FB to the center point of the external resistor divider.
4	EN	Drive this pin to a logic-high to enable the IC. Drive to a logic-low to disable the IC and enter micro-power shutdown mode. Don't floating
5	IN	Power supply Pin
6	SW	Switching Pin

5 ABSOLUTE MAXIMUM RATINGS

Parameter	Parameter	MIN	MAX	UNIT
V_{IN}&V_{EN}	Supply Voltage	-0.3	20	V
V_{SW}	SW Voltages	-0.3	20	V
$V_{SW'}$	SW Voltages (<10ns transient)	-5.0	23	V
V_{FB}	FB Voltage	-0.3	6	V
V_{BS}	BS Voltage	-0.3	26	V
V	BS to SW Voltage	-0.3	6	V
T_{STO}	Storage Temperature Range	-65	150	°C
T_J	Junction Temperature	150		°C
P	Power Dissipation	1000		mW
T_L	Lead Temperature	260		°C

Stresses above those listed in "Absolute Maximum Ratings" may cause permanent damage to the device. This is a stress only rating and operation of the device at these or any other conditions above those indicated in the operational sections of this specification is not implied.

6 RECOMMENDED OPERATING CONDITIONS

Parameter	Parameter	Rating	UNIT
V_{IN}	Supply Voltage	4.5V to 18V	V
V_{OUT}	Output Voltage	0.6V to 12V	V
T_{OP}	Operating Junction Temperature Range	–40 to +125	°C

7 PACKAGE THERMAL CHARACTERISTICS

Parameter	Parameter	Rating	UNIT
θ_{JA}	Thermal Resistance	50	°C/W
θ_{JC}	Thermal Resistance	10	°C/W
ψ_{JC}	Junction-to-case(top) characterization parameter	2.5	°C/W

Copyright © GATEMODE Corp.

8 BLOCK DIAGRAM

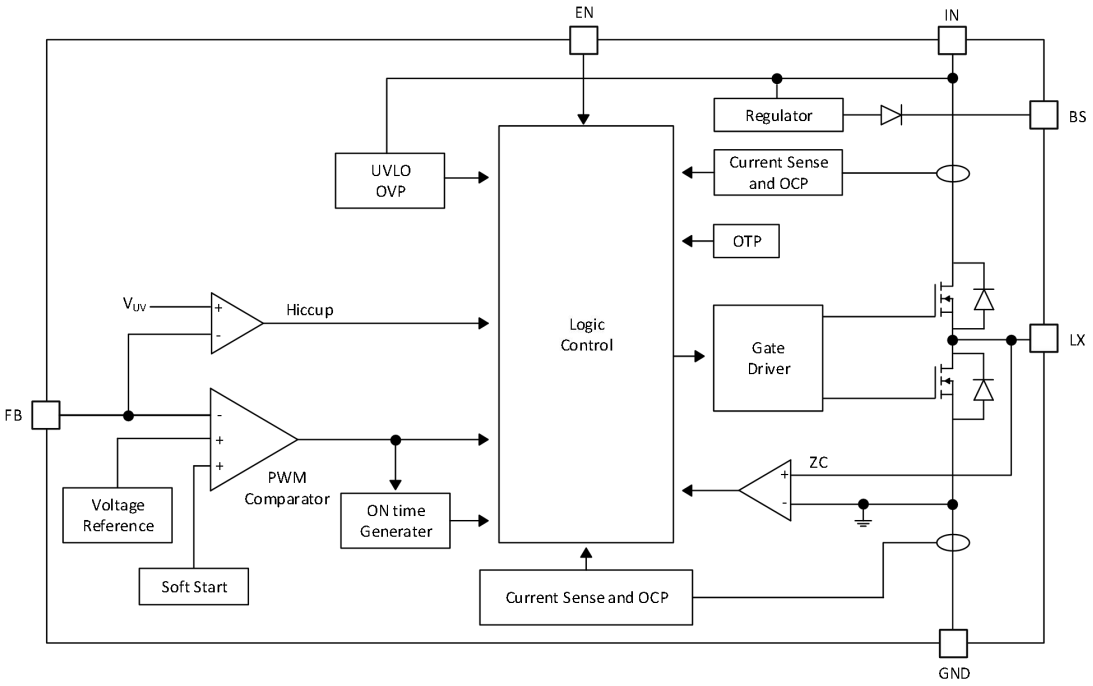

Functional Block Diagram

Copyright © GATEMODE Corp.

9 ELECTRICAL CHARACTERISTICS

V_{IN}=12V,V_{OUT}=5V,T_A=25°C,Unless otherwise noted.

PARAMETER	TEST CONDITIONS	MIN	TYP	MAX	UNIT
Supply Voltage		4.5		18	V
Output Voltage		0.6		12	V
OVP Threshold		18.5	19	19.5	V
UVLO Rising Threshold			4.1		V
UVLO Hysteresis			0.5		V
Quiescent Current	V_{EN}=2.0V, I_{OUT}=0A, V_{FB}=0.9V		300		μA
Shutdown Current	V_{IN}=12V, EN=0V		7		μA
Regulated Feedback Voltage	V_{IN}=12V	0.585	0.6	0.615	V
High-Side Switch On-Resistance*			90		mΩ
Low-Side Switch On-Resistance*			60		mΩ
High-Side Switch Leakage Current	V_{EN}=0V, V_{LX}=0V	1		10	μA
Switch Valley Current Limit	Minimum Duty Cycle		4.2		A
High-side Switch Peak Current Limit			5		A
On Time	V_{IN}=12V, V_{OUT}=5V, I_{OUT}=1A		900		ns
Oscillation Frequency		400	500	600	kHz
Switching Frequency in Maximum Duty Cycle	V_{IN}=12V, V_{FB}=0.5V		450		kHz
Maximum Duty Cycle	V_{IN}=12V, V_{FB}=0.5V		92		%
Minimum On-Time			60		ns
Minimum Off-Time			160		ns
Output UV Falling Threshold	Reference to V_{FB}		54%		V_{FB}
Soft Start Time	V_{OUT} 10% to 90%		1.1		ms
EN Rising Threshold			1.2		V
EN Falling Threshold			1.08		V
EN Hysteresis			120		mV
Thermal Shutdown Threshold *			165		°C
Thermal Shutdown Hysteresis*			30		°C

* Guaranteed by design, not tested.

Copyright © GATEMODE Corp.

10 TYPICAL PERFORMANCE CHARACTERISTICS

V_{IN} = 12V, V_O = 5V, L1 = 4.7µH, C_{ff}=33pf,Cin=22µF+0.1µF,C_{load}=22µF+22µF,T_A = +25°C, unless otherwise noted.

Efficiency
Vout=5V,L=4.7uH,T_A=+25°C

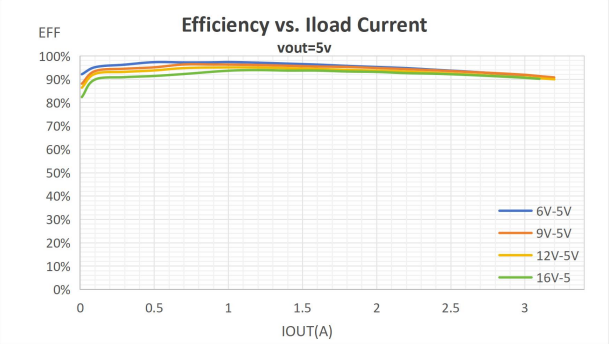

Efficiency
Vout=3.3V,L=4.7uH,T_A=+25°C

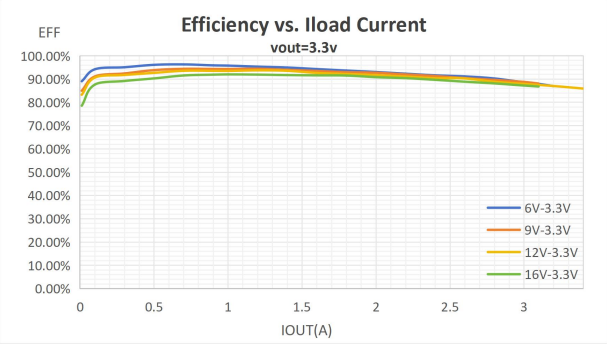

Efficiency
Vout=1.05V,L=2.4uH,T_A=+25°C

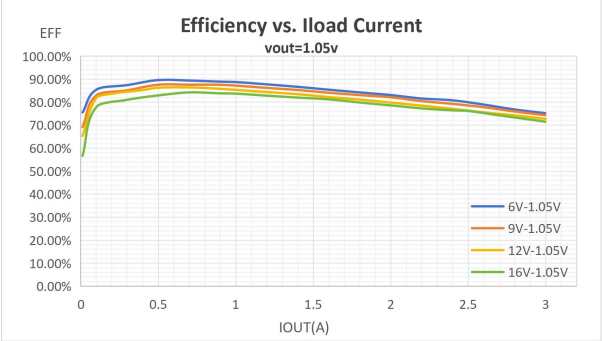

Line Regulation
Iout=1.5A,T_A=+25°C



Startup through Enable
V_{IN}=12V,Vout=5V,Iout=1A(Resistive load)

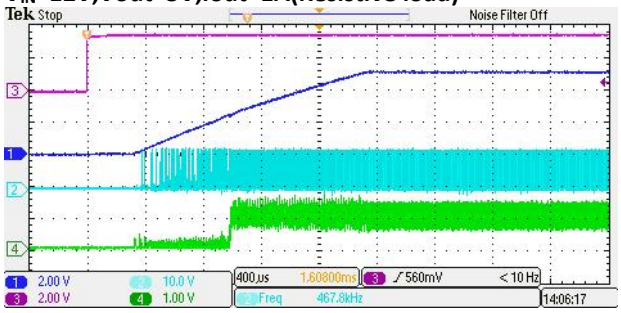

Shutdown through Enable
V_{IN}=12V,Vout=5V,Iout=1A(Resistive load)

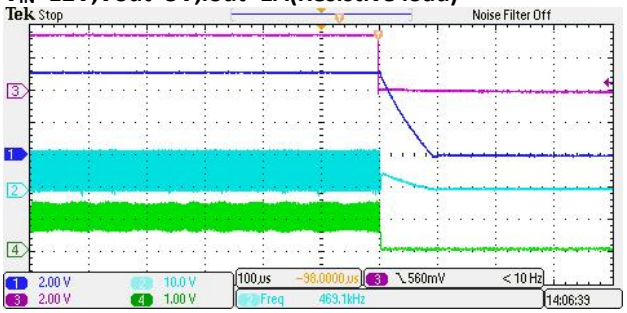

Heavy Load Operation(3A LOAD)

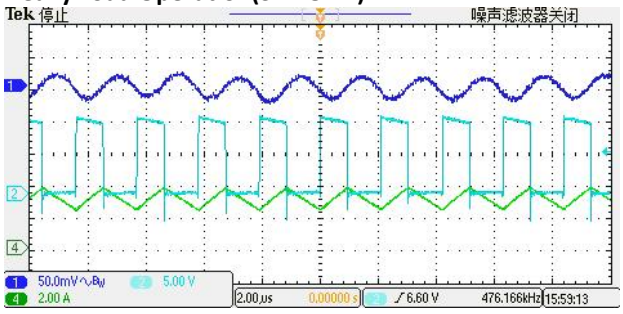

Medium Load Operation(1.5A LOAD)

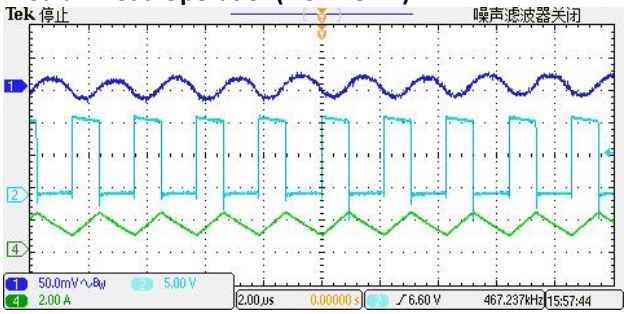

Copyright © GATEMODE Corp.
Tel: (+86) 13135660803
Email: sales@gmmicro.com

Light Load Operation(0.5A LOAD)

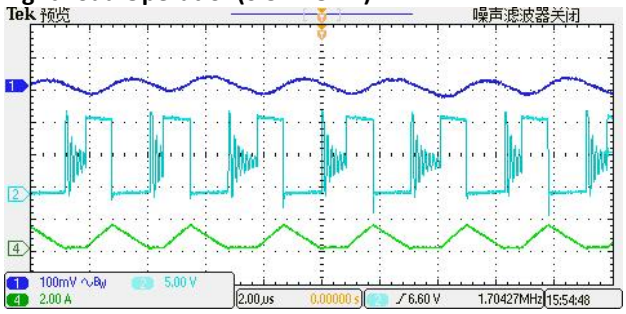

No Load Output Ripple(12V=>5V,Load=0A)

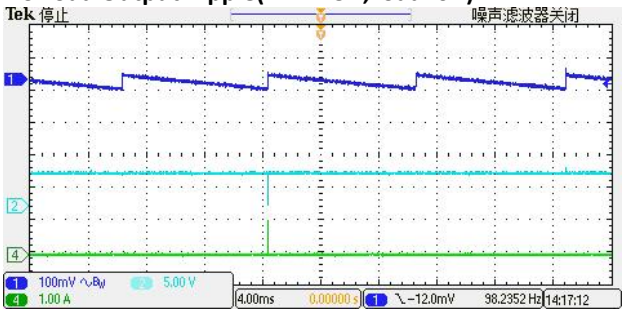

Load Transient(0A--1.5A Load)

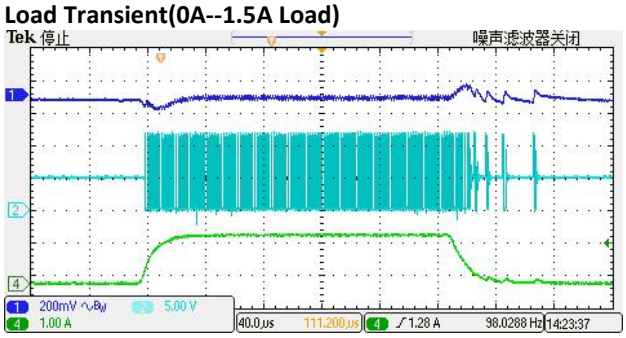

Load Transient(1.5A--3A Load)

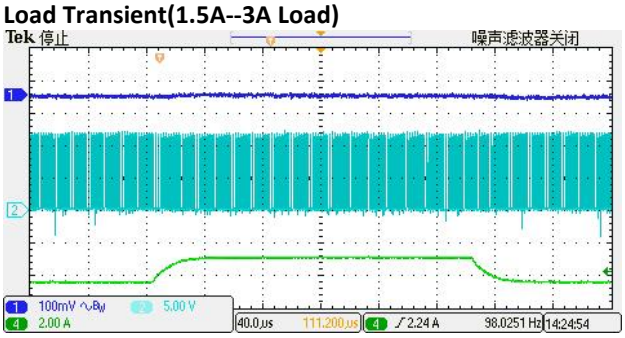

Short&Hiccup Protection

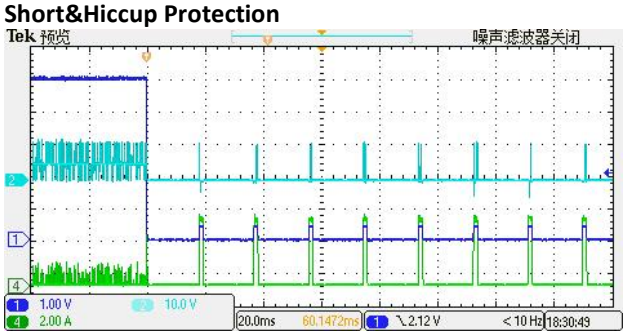

Over Temperature Protection)

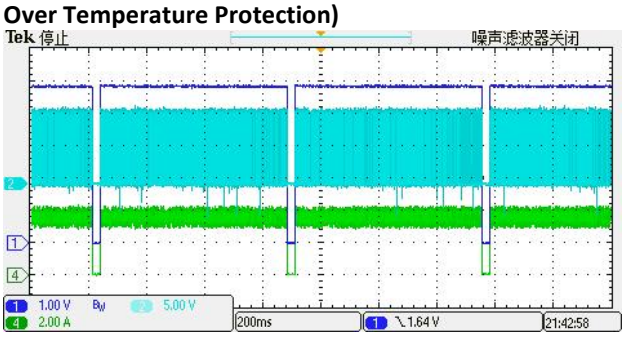

11 OPERATION

The HM81832Y is an advanced constant on-time (COT) step down DC/DC converter that provides excellent transient response with no extra external compensation components. This device contains low resistance, high voltage high side and low side power MOSFETs, and operates at 500kHz operating frequency to ensure a compact, high efficiency design with excellent AC and DC performance.

Maximum Duty Cycle

HM81832Y is based on COT control mode and it has minimum off time. The maximum duty cycle is limited by minimum off time and maximum on time. HM81832Y has a mechanism to decrease the switching frequency by increasing on-time, when the input voltage of HM81832Y is close to output voltage and minimum off time is reached, the high side switch on time extends, and the frequency drops. With this function, the HM81832Y is able to 94% maximum duty cycle and 450kHz switching frequency typically.

Internal Soft-Start

The soft-start is implemented to prevent the converter output voltage from overshooting during startup. When the chip starts, the internal circuitry generates a soft-start voltage (SS) ramping up from 0V to 0.6V(0%-100%). When it is lower than the internal FB reference (V_{REF}), SS overrides REF so the error amplifier uses SS as the reference. When SS is higher than V_{REF}, V_{REF} regains control. The SS time is internally fixed to 1.5ms typically (V_{OUT} 10% to 90% is internally fixed to 1.1ms typically).

Copyright © GATEMODE Corp.

Over-Current-Protection and Short Circuits Protection

The HM81832Y has cycle-by-cycle current limit on both high-side MOSFET and low-side MOSFET. During every switching cycle and high side MOSFET is turned on, when the peak current of high-side MOSFET is larger than high-side MOSFET peak current limit the high-side MOSFET is turned off and low-side MOSFET is turned on immediately. When the low-side MOSFET valley current value is larger than the valley current limit during low side MOSFET on state, the device enters into valley over current protection mode and low side MOSFET keeps on state until inductor current drops down to the value equal or lower than the valley current limit, and then on time pulse could be generated and high side MOSFET could turn on again. If the output is short to GND and the output voltage drop until feedback voltage VFB is below the output under-voltage VUV threshold which is typically 54% of VREF, HM81832Y enters into hiccup mode to periodically disable and restart switching operation. The hiccup mode helps to reduce power dissipation and thermal rise during output short condition. The period of HM81832Y hiccup mode is typically 22ms.

Startup and Shutdown

If both VIN and EN are higher than their appropriate thresholds, the chip starts switching operation. The reference block starts first, generating stable reference voltage and currents, and then the internal regulator is enabled. The regulator provides stable supply for the remaining circuitries. Three events can shut down the chip: EN low, VIN low and thermal shutdown. In the shutdown procedure, the signaling path is first blocked to avoid any fault triggering. The floating driver is not subject to this shutdown command.

Thermal Shutdown

The HM81832Y implements a thermal shutdown mechanism to protect the device from damage due to overheating. When the junction temperature rises to 165°C (typical), the device shuts down immediately. The HM81832Y releases thermal shutdown when the junction temperature of the device is reduced to 135°C typically.

Copyright © GATEMODE Corp.

12 APPLICATION INFORMATION

SETTING THE OUTPUT VOLTAGE

The external resistor divider sets the output voltage. The feedback resistor R2 also sets the feedback-loop bandwidth through the internal compensation capacitor (see the Typical Application circuit). Choose R2 around 10kΩ, and R1 by:

$$R2 = R1 / (V_{OUT}/0.6V - 1)$$

Use a network below for when V_{OUT} is low.

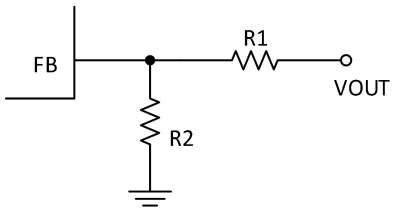

Figure 1: Network.

VOUT	R1	R2
1.05V	9KΩ(1%)	12KΩ(1%)
1.8V	20KΩ(1%)	10KΩ(1%)
2.5V	31.6KΩ(1%)	10KΩ(1%)
3.3V	39KΩ(1%)	8.66KΩ(1%)
5V	39KΩ(1%)	5.23KΩ(1%)

A C_{FB} capacitor paralleling with high side divider resistor R1 can be used to improve load transient performance. It adds a zero in the frequency $1/2\pi \cdot R1 \cdot C_{FB}$ to increase bandwidth of the system. 33pF C_{ff} is sufficient in most application. In fast transient load current condition, increasing C_{FB} capacitance helps to improve transient performance and reduce output ripple value. C_{FB} capacitor value could be regulated according to output capacitor value and loop stability margin.

SELECTING THE INDUCTOR

A 1.0μH to 4.7μH inductor with a DC current rating of at least 25% percent higher than the maximum load current is recommended for most applications. For highest efficiency, the inductor DC resistance should be as small as possible. For most designs, the inductance value can be derived from the following equation.:

$$L = [\ V_{OUT} / (f_S \times \Delta I_L)\ ] \times (1 - V_{OUT}/V_{IN})$$

Where V_{OUT} is the output voltage, V_{IN} is the input voltage, f_S is the switching frequency, and ΔI_L is the peak-to-peak inductor ripple current.

Where ΔI_L is the inductor ripple current. Choose inductor ripple current to be approximately 30% if the maximum load current, 2A. The maximum inductor peak current is:

$$I_{LP(MAX)} = I_{LOAD} + (\Delta I_L / 2)$$

Copyright © GATEMODE Corp.

INPUT CAPACITOR

The input current to the step-down converter is discontinuous, therefore a capacitor is required to supply the AC current to the step-down converter while maintaining the DC input voltage. Use low ESR capacitors for the best performance. Ceramic capacitors are preferred, but tantalum or low-ESR electrolytic capacitors may also suffice. Choose X5R or X7R dielectrics when using ceramic capacitors.

Since the input capacitor (C1) absorbs the input switching current it requires an adequate ripple current rating. The RMS current in the input capacitor can be estimated by:

$$I_{C1} = I_{LOAD} \times [(V_{OUT}/V_{IN}) \times (1 - V_{OUT}/V_{IN})]1/2$$

The worst-case condition occurs at $V_{IN} = 2V_{OUT}$, where $I_{C1} = I_{LOAD}/2$. For simplification, choose the input capacitor whose RMS current rating greater than half of the maximum load current.

The input capacitor can be electrolytic, tantalum or ceramic. When using electrolytic or tantalum capacitors, a small, high quality ceramic capacitor, i.e. 0.1µF, should be placed as close to the I_C as possible. When using ceramic capacitors, make sure that they have enough capacitance to provide sufficient charge to prevent excessive voltage ripple at input. The input voltage ripple for low ESR capacitors can be estimated by:

$$\Delta V_{IN} = [I_{LOAD}/(C1 \times f_S)] \times (V_{OUT}/V_{IN}) \times (1 - V_{OUT}/V_{IN})$$

Where C1 is the input capacitance value.

OUTPUT CAPACITOR

The output capacitor is required to maintain the DC output voltage. Ceramic, tantalum, or low ESR electrolytic capacitors are recommended. Low ESR capacitors are preferred to keep the output voltage ripple low. The output voltage ripple can be estimated by:

$$\Delta V_{OUT} = [V_{OUT}/(f_S \times L)] \times (1 - V_{OUT}/V_{IN}) \times [R_{ESR} + 1 / (8 \times f_S \times C2)]$$

Where C2 is the output capacitance value and RESR is the equivalent series resistance (ESR) value of the output capacitor.

In the case of ceramic capacitors, the impedance at the switching frequency is dominated by the capacitance. The output voltage ripple is mainly caused by the capacitance. For simplification, the output voltage ripple can be estimated by:

$$\Delta V_{OUT} = [V_{OUT}/(8 \times f_{S2} \times L \times C2)] \times (1 - V_{OUT}/V_{IN})$$

In the case of tantalum or electrolytic capacitors, the ESR dominates the impedance at the switching frequency. For simplification, the output ripple can be approximated to:

$$\Delta V_{OUT} = [V_{OUT}/(f_S \times L)] \times (1 - V_{OUT}/V_{IN}) \times R_{ESR}$$

The characteristics of the output capacitor also affect the stability of the regulation system.

Copyright © GATEMODE Corp.

13 LAYOUT

PCB layout is very important to achieve stable operation. Please follow the guidelines below.

1) Keep the path of switching current short and minimize the loop area formed by Input capacitor, high-side MOSFET and low-side MOSFET.
2) Bypass ceramic capacitors are suggested to be put close to the VIN Pin.
3) Ensure all feedback connections are short and direct. Place the feedback resistors and compensation components as close to the chip as possible.
4) Rout SW away from sensitive analog areas such as FB.
5) Connect IN, SW, and especially GND respectively to a large copper area to cool the chip to improve thermal performance and long-term reliability.
6) It is recommended to reserve a place for CFF in layout.

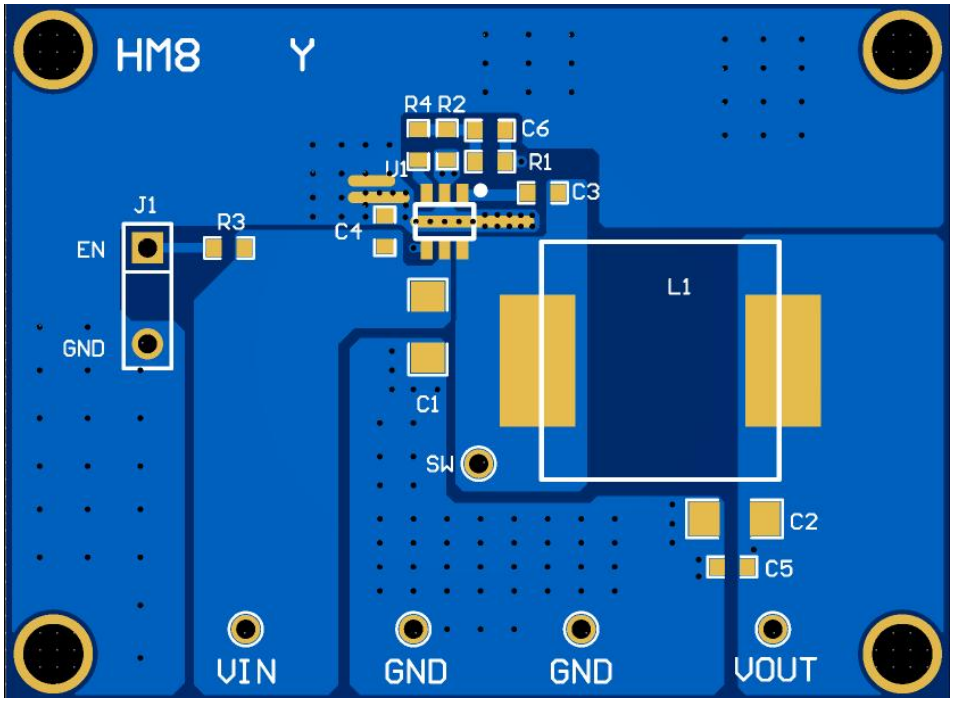

Copyright © GATEMODE Corp.

PACKAGE DIMENSIONS

SOT23-6

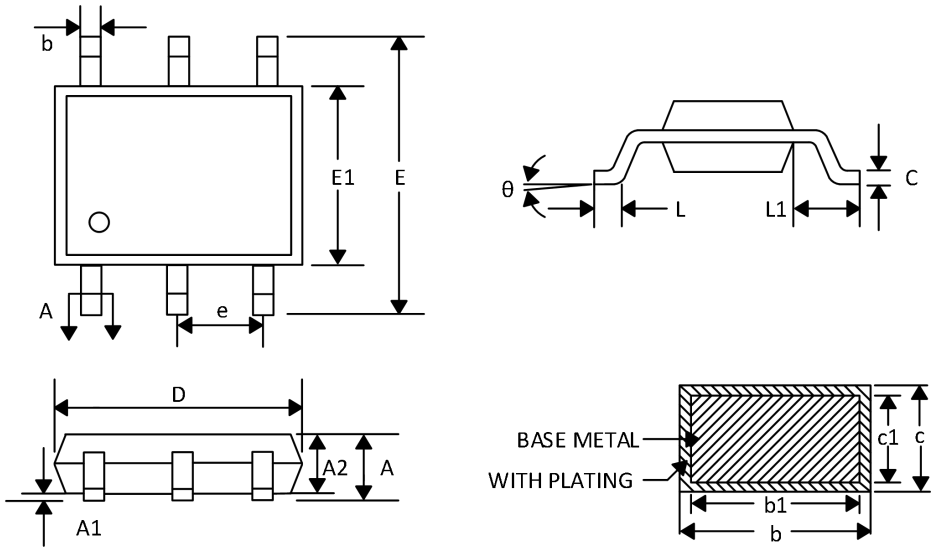

Symbol	MIN	NOM	MAX
A	-	-	1.25
A1	0.03	0.08	0.15
A2	1.05	1.10	1.15
b	0.27	-	0.35
b1	0.26	0.285	0.31
c	0.135	-	0.23
c1	0.127	0.152	0.178
D	2.82	2.92	3.02
E	2.60	2.90	3.00
E1	1.50	1.62	1.70
e		0.95BSC	
L	0.35	0.45	0.55
L1	0.49	0.64	0.79
θ	0°	-	8°

Copyright © GATEMODE Corp.

ORDER INFORMATION

Order number	Package	Marking information	Operation Temperature Range	MSL Grade	Ship, Quantity	Green
HM81832Y	SOT23-6	D1YWW(1)	-40 to 85°C	3	T&R,3000	RoHs

(1) D1 denotes the fixed Version Code, while YWW represents the Date Code.

Copyright © GATEMODE Corp.