LM-PESD2ETH1GXT-Q

2-Line Bi-directional TVS Diode Array

Features

- Ultra low leakage: nA level
- Operating voltage: 24V
- Low clamping voltage
- Complies with following standards:
  - IEC 61000-4-2 (ESD) immunity test
    - Air discharge: ±30kV
    - Contact discharge: ±30kV
  - IEC61000-4-4 (EFT) 40A (5/50ns)
  - IEC61000-4-5 (Lightning) 3A (8/20 μs)
- RoHS Compliant
- AEC-Q101 qualified

Dimensions SOT-23



Pin Configuration

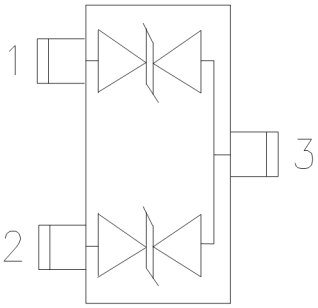

Applications

ESD protection for in-vehicle network lines In-automotive environments

- OPEN Alliance 100BASE-T1 Ethernet
- Low-Voltage Differential Signaling (LVDS) automotive

Mechanical Characteristics

- Package: SOT-23
- Lead Finish: Lead Free
- UL Flammability Classification Rating 94V-0
- Quantity Per Reel:3,000pcs
- Reel Size:7inch
- Device Marking:24ML

Absolute Maximum Ratings(Tamb=25°C unless otherwise specified)

Parameter	Symbol	Value	Unit
Peak Pulse Power (8/20μs)	Ppk	180	W
Peak Pulse Current (8/20μs)	IPP	3	A
ESD per IEC 61000−4−2 (Air) ESD per IEC 61000−4−2 (Contact)	VESD	±30 ±30	kV
Operating Temperature Range	TJ	−55 to +125	°C
Storage Temperature Range	Tstg	−55 to +150	°C

Electrical Characteristics(TA=25°C unless otherwise specified)

Parameter	Symbol	Test Condition	Min	Typ	Max	Unit
Reverse Working Voltage	V_{RWM}				24	V
Breakdown Voltage	V_{BR}	I_T = 1mA	27			V
Reverse Leakage Current	I_R	V_{RWM} = 24V			0.2	μA
Clamping Voltage	V_C	I_{PP} = 1A (8 x 20μs pulse)			36	V
Clamping Voltage	V_C	I_{PP} = 3A (8 x 20μs pulse)			60	V
Junction Capacitance	C_J	VR = 0V, f = 1MHz, Pin 1 to Pin 3 or Pin 2 to Pin 3		5		pF
Junction Capacitance	C_J	VR = 0V, f = 1MHz, Pin 1 to Pin 2		3		pF

Typical Performance Characteristics(TA=25°C unless otherwise specified)

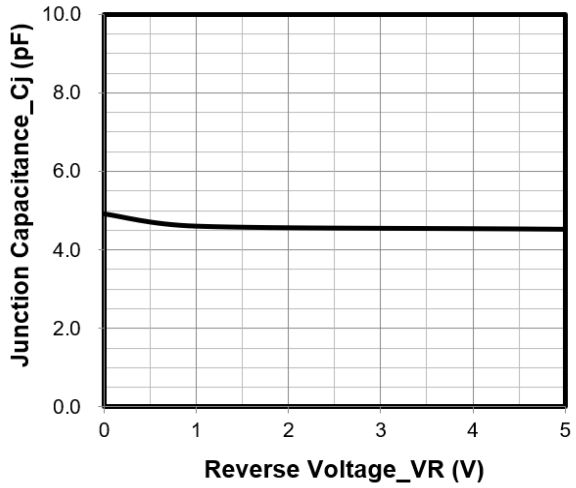

Junction Capacitance vs. Reverse Voltage

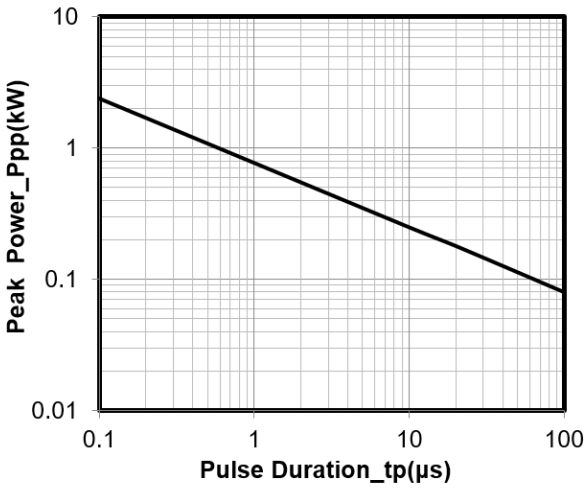

Peak Pulse Power vs. Pulse Time

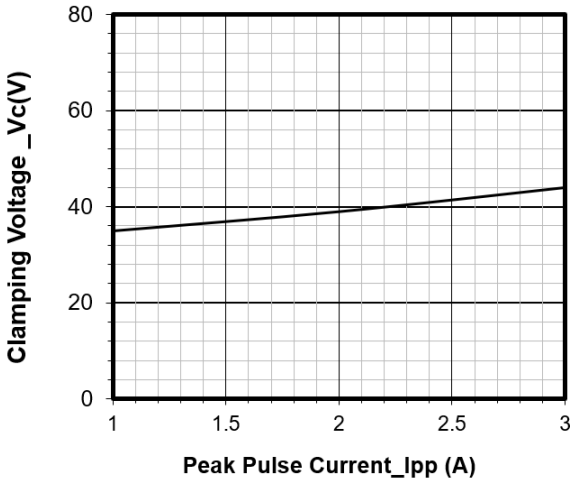

Clamping Voltage vs. Peak Pulse Current

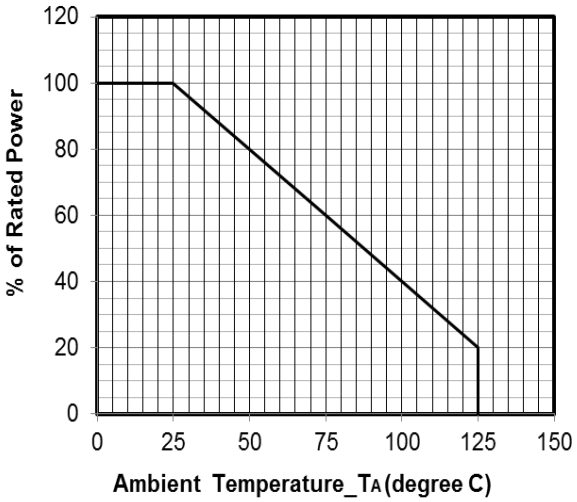

Power Derating Curve

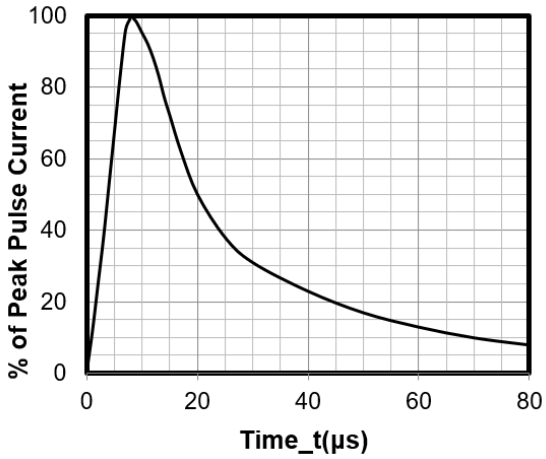

8 X 20μs Pulse Waveform

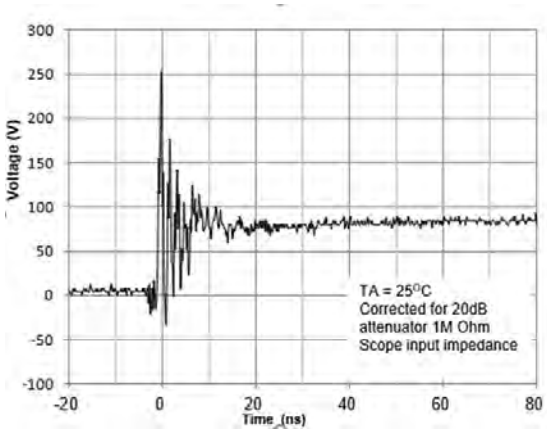

ESD Clamping Voltage
8 kV Contact per IEC61000−4−2

SOT-23 Package Outline Drawing

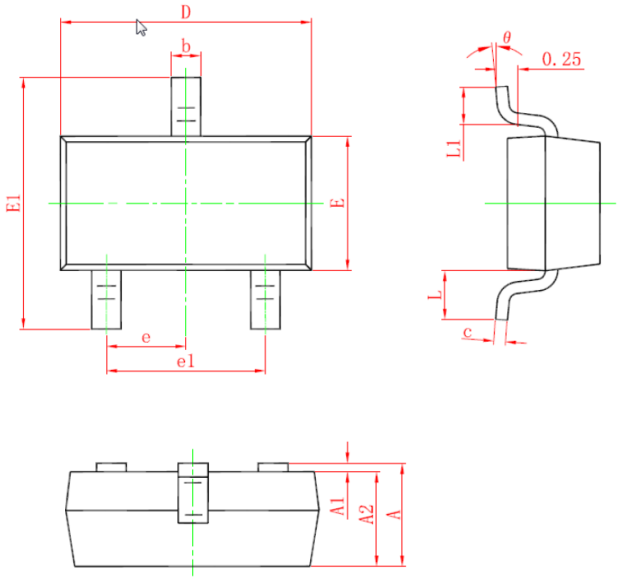

SYM	DIMENSIONS					
	MILLIMETERS			INCHES		
	MIN	NOM	MAX	MIN	NOM	MAX
A	0.90	- -	1.15	0.035	- -	0.045
A1	0.00	- -	0.10	0.000	- -	0.004
A2	0.90	- -	1.05	0.035	- -	0.041
b	0.30	- -	0.50	0.012	- -	0.020
c	0.08	- -	0.15	0.003	- -	0.006
D	2.80	- -	3.00	0.110	- -	0.118
E	1.20	- -	1.40	0.047	- -	0.055
E1	2.25	- -	2.55	0.089		0.100
e	0.95TYP			0.037TYP		
e1	1.80	- -	2.00	0.071	- -	0.079
L	0.55REF			0.022REF		
L1	0.30	- -	0.50	0.012	- -	0.020
Θ	0°	- -	8°	0°	- -	8°

Suggested Land Pattern

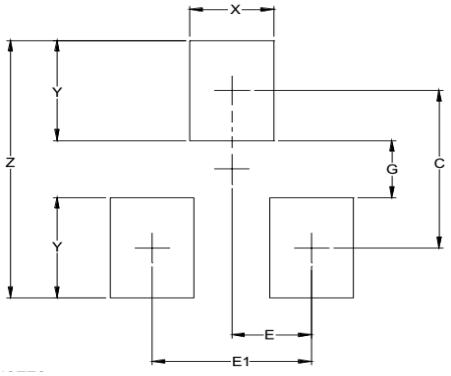

SYM	DIMENSIONS	
	INCHES	MILLIMETERS
C	.087	2.20
E	.037	0.95
E1	.075	1.90
G	.031	0.80
X	.039	1.00
Y	.055	1.40
Z	.141	3.60

NOTICE
Leiditech reserves the right to make modifications,enhancements,improvements,corrections or other changes without further notice to any product herein. Leiditech does not assume any liability arising out of the application or use of any product described herein.

Shanghai Leiditech Electronic Technology Co., Ltd.
Email: sale1@leiditech.com
Tel : +86- 021 50828806
Fax : +86- 021 50477059