LM-PESD15VL1BA

1-Line Bi-directional TVS Diode

Features

- Ultra low leakage: nA level
- Operating voltage: 15V
- Low clamping voltage
- Complies with following standards:
  - – IEC 61000-4-2 (ESD) immunity test
    - Air discharge: ±15kV
    - Contact discharge: ±8kV
  - – IEC61000-4-4 (EFT) 40A (5/50ns)
  - – IEC61000-4-5 (Lightning) 6A (8/20μs)
- RoHS Compliant

Dimensions SOD-323



Applications

- Cell Phone Handsets andAccessories
- Microprocessor based equipment
- Personal DigitalAssistants(PDA's)
- Notebooks, Desktops, and Servers
- Portable Instrumentation
- Networking and Telecom
- Serial and Parallel Ports
- Peripherals

Pin Configuration

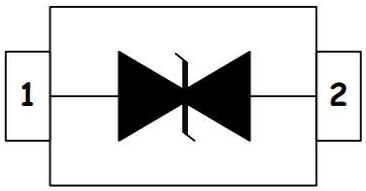

Mechanical Characteristics

- Package: SOD-323
- Lead Finish: Lead Free
- UL Flammability Classification Rating 94V-0
- Quantity Per Reel:3,000pcs
- Reel Size:7 inch
- Device Marking:2J

Absolute Maximum Ratings(Tamb=25°C unless otherwise specified)

Parameter	Symbol	Value	Unit
Peak Pulse Power (8/20μs)	Ppp	350	W
ESD per IEC 61000−4−2 (Air)	V_{ESD}	± 15	kV
ESD per IEC 61000−4−2 (Contact)		± 8	
Operating Temperature Range	T_J	-55 to +125	℃
Storage Temperature Range	T_{STJ}	-55 to +150	℃

Electrical Characteristics(TA=25°C unless otherwise specified)

Parameter	Symbol	Test Condition	Min	Typ	Max	Unit
Reverse Working Voltage	V_{RWM}				15	V
Breakdown Voltage	V_{BR}	I_T = 1mA	16.7			V
Reverse Leakage Current	I_R	V_{RWM} = 15V			1	μA
Clamping Voltage	V_C	I_{PP} = 1A (8 x 20 μs pulse)			24	V
Clamping Voltage	V_C	I_{PP} = 6A (8 x 20 μs pulse)			30	V
Junction Capacitance	C_J	V_R = 0V, f = 1MHz		45		pF

Characteristic Curves

Fig1. 8/20μs Pulse Waveform

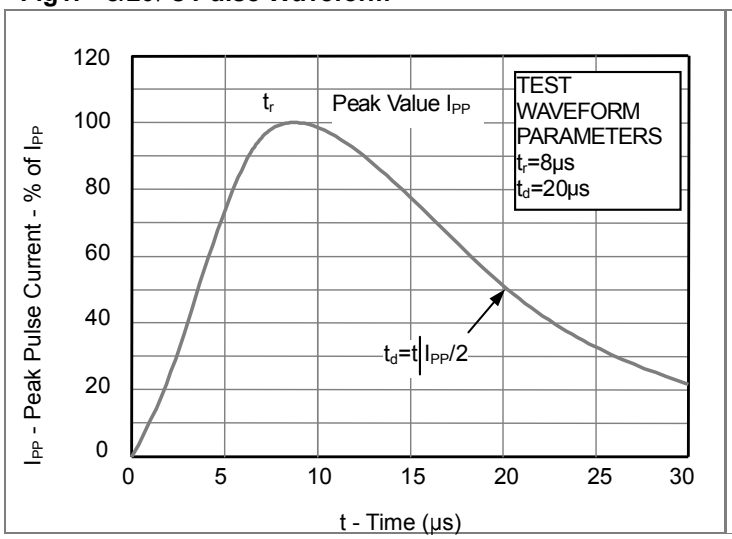

Fig2. ESD Pulse Waveform (according to IEC 61000-4-2)

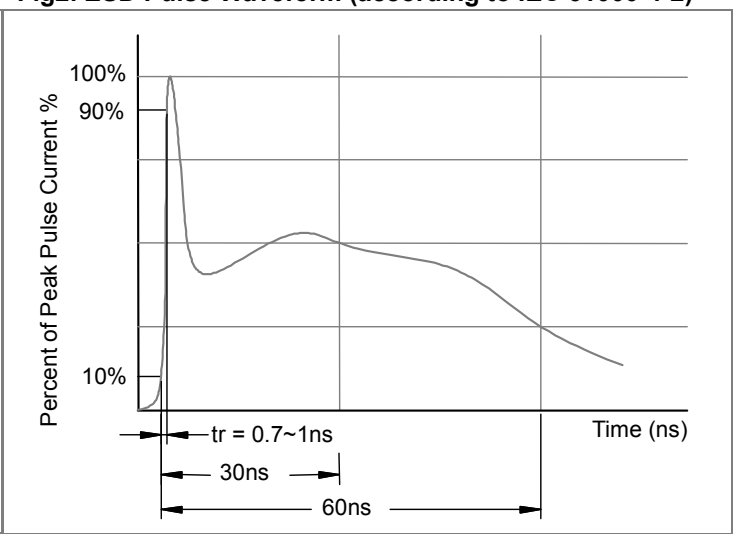

Fig3. Power Derating Curve

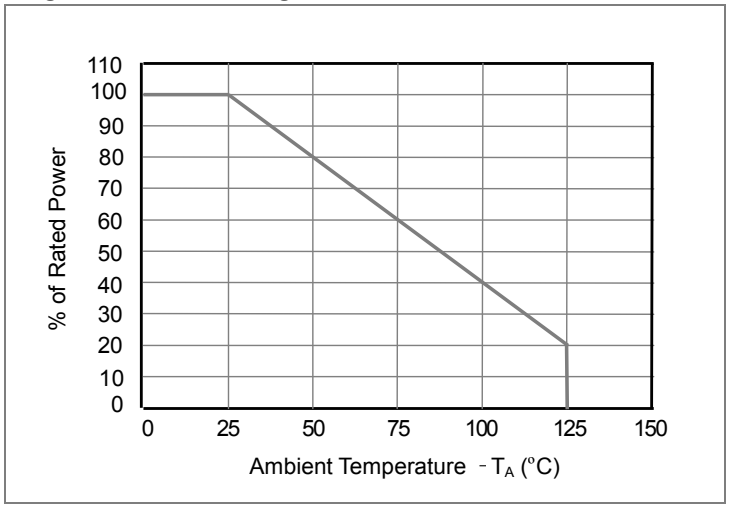

SOD-323 Package Outline & Dimensions

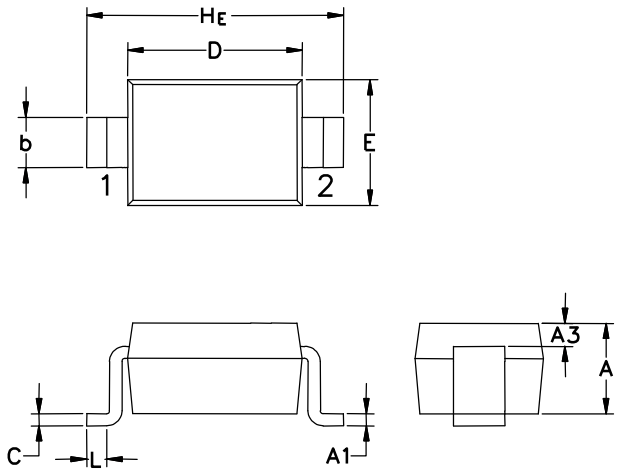

Symbol	Millimeters			Inches		
	Min.	Nom.	Max.	Min.	Nom.	Max.
A	0.80	0.90	1.00	0.031	0.035	0.040
A1	0.00	0.05	0.10	0.000	0.002	0.004
A3	0.15 REF			0.006 REF		
b	0.25	0.32	0.40	0.010	0.012	0.016
C	0.089	0.12	0.177	0.003	0.005	0.007
D	1.60	1.70	1.80	0.062	0.066	0.070
E	1.15	1.25	1.35	0.045	0.049	0.053
L	0.08			0.003		
H_E	2.30	2.50	2.70	0.090	0.098	0.105

Soldering Footprint

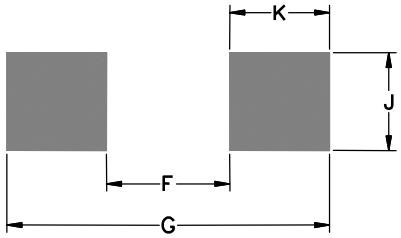

Symbol	Millimeters	Inches
F	1.60	0.063
G	2.85	0.112
J	0.83	0.033
K	0.63	0.025

NOTICE

Leiditech reserves the right to make modifications,enhancements,improvements,corrections or other changes without further notice to any product herein. Leiditech does not assume any liability arising out of the application or use of any product described herein.

Shanghai Leiditech Electronic Technology Co., Ltd.
Email: sale1@leiditech.com
Tel : +86- 021 50828806
Fax : +86- 021 50477059