WGD13N50SE

Features:

- ☐ Low Intrinsic Capacitances
- ☐ Excellent Switching Characteristics
- ☐ Extended Safe Operating Area
- ☐ Unrivalled Gate Charge :Qg= 50nC (Typ.)
- ☐ BVDSS=500V,ID=13A
- ☐ $R_{DS(on)}$:0.50Ω (Max) @VG=10V
- ☐ 100% Avalanche Tested

TO-252

RoHS COMPLIANT

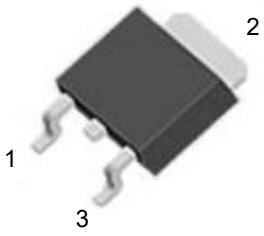

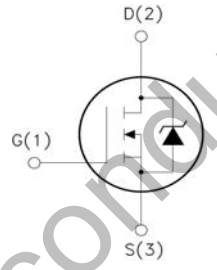

1.Gate (G)
2.Drain (D)
3.Source (S)

Absolute Maximum Ratings (Ta=25℃ unless otherwise noted)

Symbol	Parameter		Value	Unit
V_{DSS}	Drain-Source Voltage		500	V
I_D	Drain Current	T_j=25℃	13	A
		T_j=100℃	7.9	
$V_{GS(TH)}$	Gate Threshold Voltage		±30	V
E_{AS}	Single Pulse Avalanche Energy (note1)		500	mJ
I_{AR}	Avalanche Current (note2)		13	A
P_D	Power Dissipation (Tj=25℃)		50	W
T_j	Junction Temperature(Max)		150	℃
T_{stg}	Storage Temperature		-55~+150	℃
TL	Maximum lead temperature for soldering purpose,1/8" from case for 5 seconds		300	℃

Thermal Characteristics

Symbol	Parameter	Typ.	Max.	Unit
$R_{\theta JC}$	Thermal Resistance,Junction to Case	-	2.50	℃/W
$R_{\theta JA}$	Thermal Resistance,Junction to Ambient	-	62.5	℃/W

WildGoose Semiconductor

Electrical Characteristics (Ta=25℃ unless otherwise noted)

Symbol	Parameter	Test Condition	Min.	Typ.	Max.	Unit
Off Characteristics						
BV_{DSS}	Drain-Source Breakdown Voltage	I_D=250μA，V_{GS}=0	500	-	-	V
△BVDSS/△TJ	Breakdown Voltage Temperature Coefficient	I_D=250μA ,Reference to 25℃	-	0.65	-	V/℃
I_{DSS}	Zero Gate Voltage Drain Current	V_{DS}=500V, V_{GS}=0V	-	-	1	μA
		V_{DS}=400V, Tj=125℃			100	
I_{GSSF}	Gate-body leakage Current, Forward	V_{GS}=+30V, V_{DS}=0V	-	-	100	nA
I_{GSSR}	Gate-body leakage Current, Reverse	V_{GS}=-30V, V_{DS}=0V	-	-	-100	
On Characteristics						
$V_{GS(TH)}$	Date Threshold Voltage	I_D=250μA,V_{DS}=V_{GS}	2	-	4	V
$R_{DS(ON)}$	Static Drain-Source On-Resistance	I_D=6.5A,V_{GS}=10V	-	0.45	0.50	Ω
Dynamic Characteristics						
Ciss	Input Capacitance	V_{DS}=25V，V_{GS}=0，f=1.0MHz	-	1680	-	pF
Coss	Output Capacitance		-	120	-	
Crss	Reverse Transfer Capacitance		-	12	-	
Switching Characteristics						
Td(on)	Turn-On Delay Time	V_{DD}=250V，I_D=13A R_G=25Ω (Note 3,4)	-	40	-	nS
Tr	Turn-On Rise Time		-	140	-	
Td(off)	Turn-Off Delay Time		-	125	-	
Tf	Turn-Off Rise Time		-	85	-	
Qg	Total Gate Charge	V_{DS}=400V,V_{GS}=10V，I_D=13A (Note 3,4)	-	50	-	nC
Qgs	Gate-Source Charge		-	9.8	-	
Qgd	Gate-Drain Charge		-	18.5	-	
Drain-Source Diode Characteristics and Maximum Ratings						
Is	Max. Diode Forward Current	-	-	-	13	A
I_{SM}	Max. Pulsed Forward Current	-	-	-	52	
V_{SD}	Diode Forward Voltage	I_D=13A	-	-	1.4	V
Trr	Reverse Recovery Time	I_S=13A,V_{GS} =0V diF/dt=100A/μs (Note3)	-	420	-	nS
Qrr	Reverse Recovery Charge		-	4.2	-	μC

Notes : 1, L=17.1mH, IAS=13A, VDD=50V, RG=25Ω, Starting TJ =25°C
2, Repetitive Rating : Pulse width limited by maximum junction temperature
3, Pulse Test : Pulse Width ≤ 300μs, Duty Cycle ≤ 2%
4, Essentially Independent of Operating Temperature

WildGoose Semiconductor

Typical Characteristics

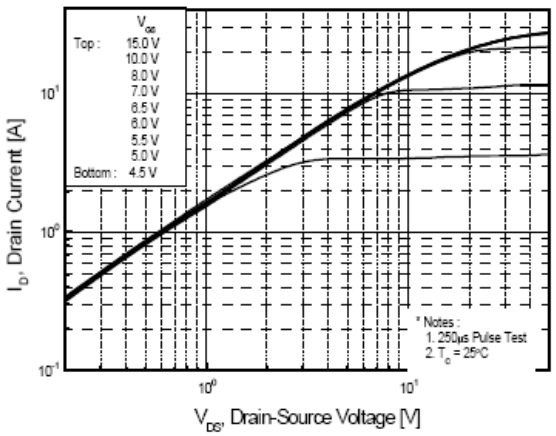

Fig1 Typical Output Characteristics, Tc=25℃

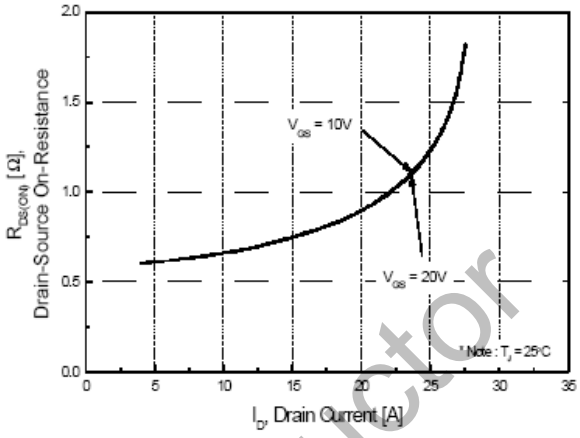

Fig2 On-Resistance Vs.Drain Current and Gate Voltage

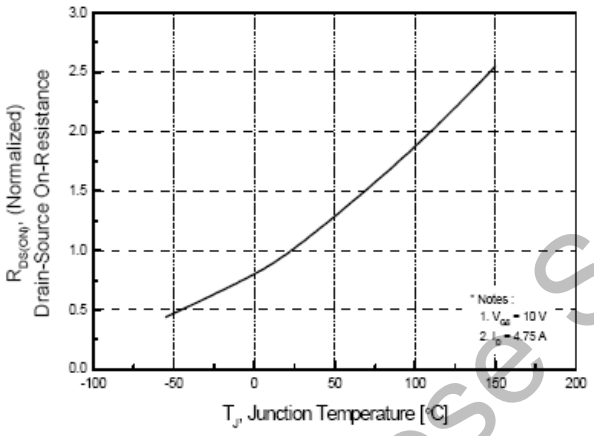

Fig3 Normalized On-Resistance Vs.Temperature

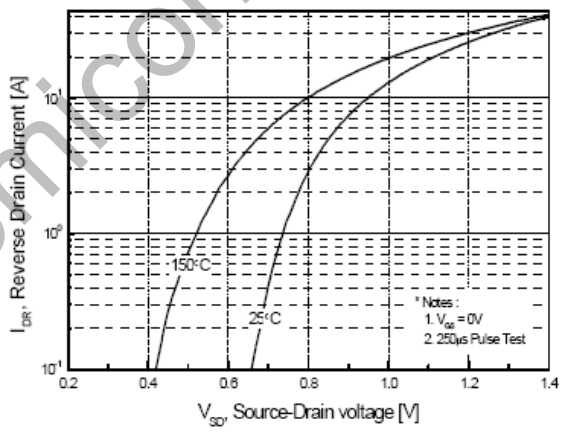

Fig4 Typical Source-Drain Diode Forward Voltage

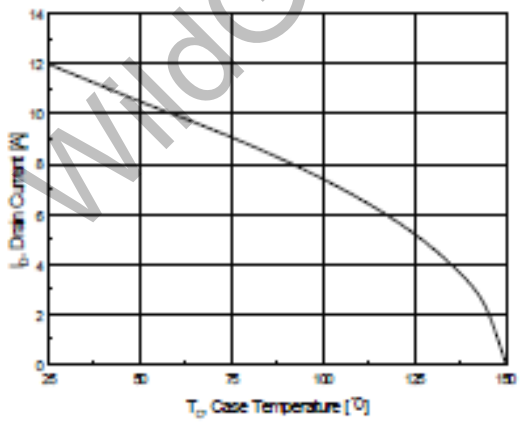

Fig5 Maximum Drain Current Vs.Case Temperature

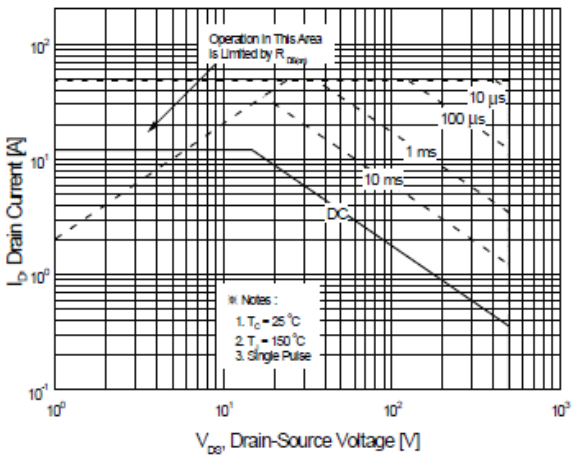

Fig6 Maximum Safe Operating Area

WildGoose Semiconductor

Gate Charge Test Circuit & Waveform

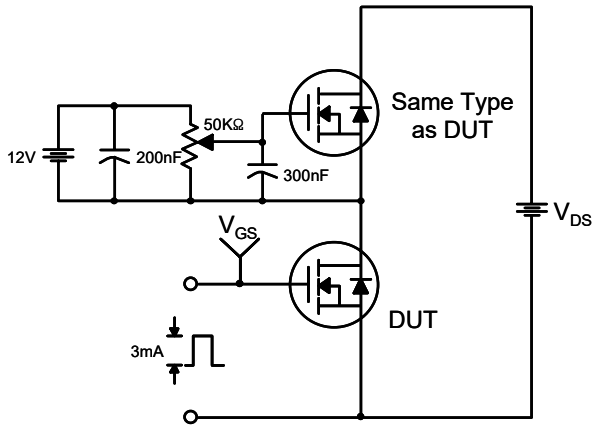

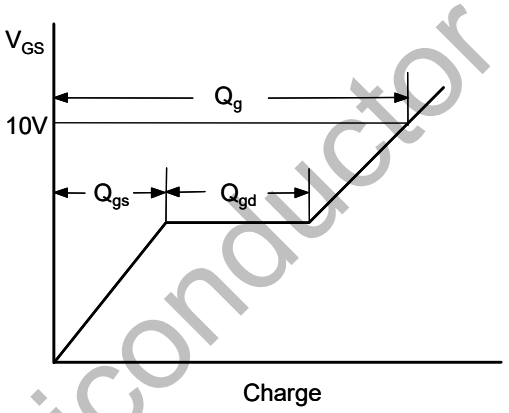

Resistive Switching Test Circuit & Waveforms

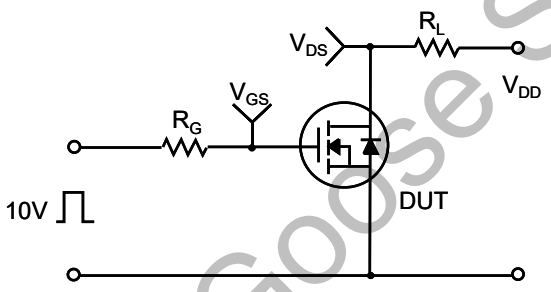

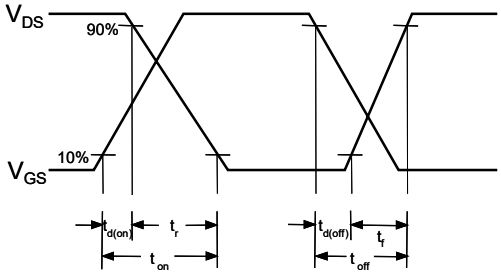

Unclamped Inductive Switching Test Circuit & Waveforms

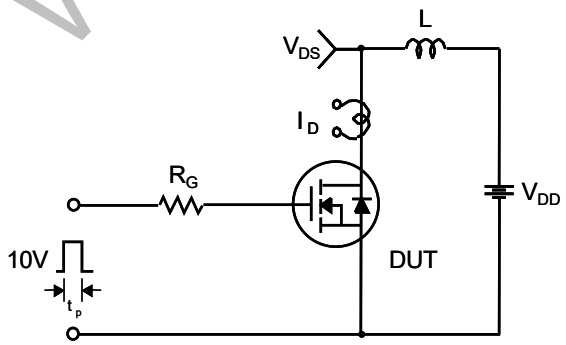

$$E_{AS} = \frac{1}{2} L I_{AS}^2 \frac{BV_{DSS}}{BV_{DSS} - V_{DD}}$$

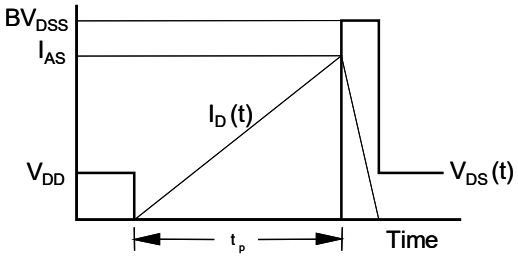

WildGoose Semiconductor

Peak Diode Recovery dv/dt Test Circuit & Waveforms

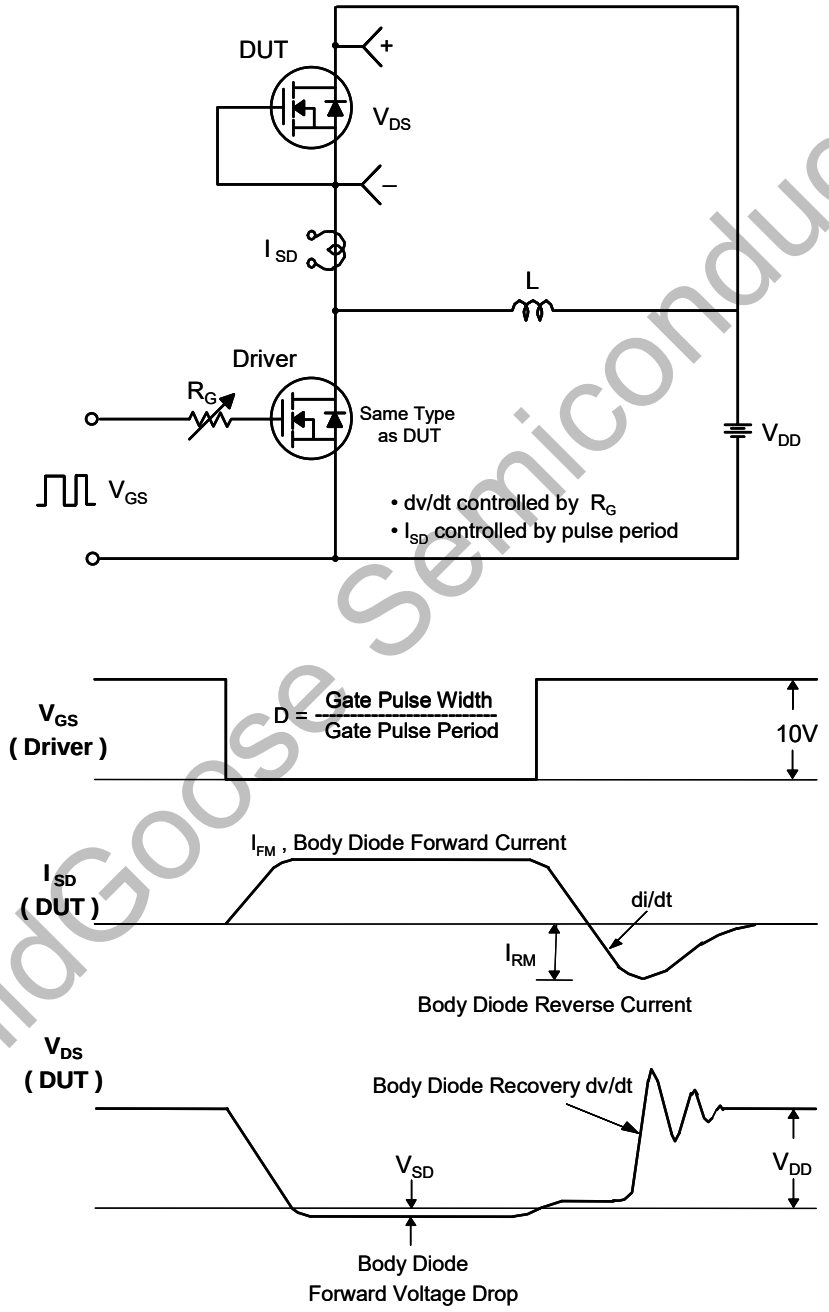

WildGoose Semiconductor

Package Dimension

TO-252

Unit: mm

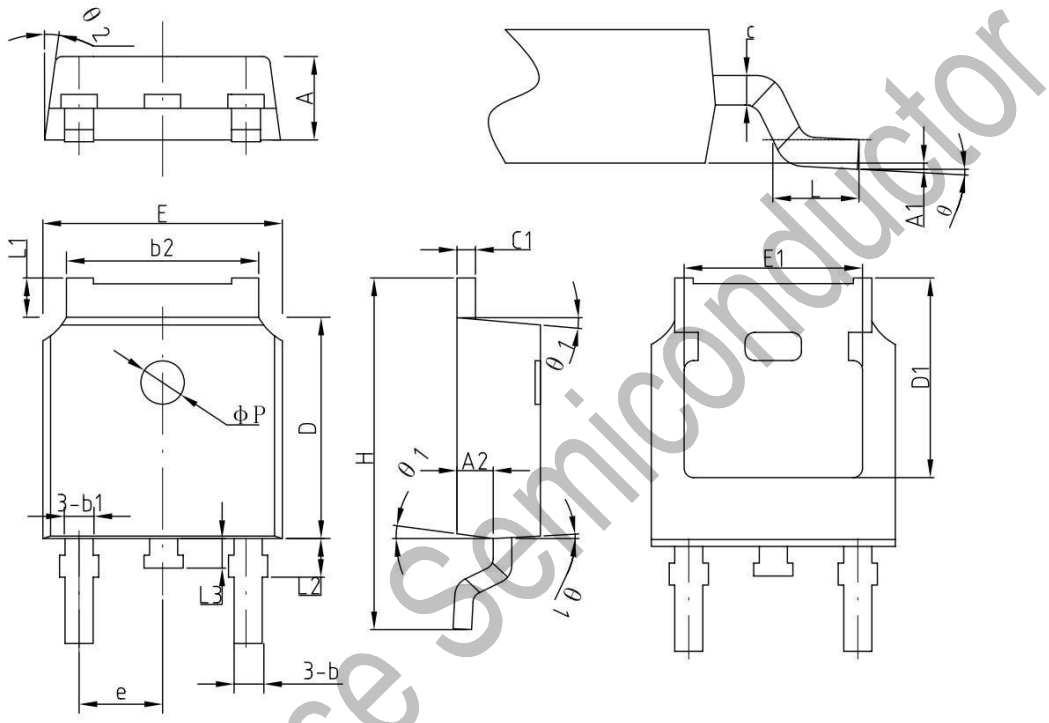

COMMON DIMENSIONS
(UNITS OF MEASURE=MILLIMETER)

SYMBOL	MIN	NOM	MAX
A	2.2	2.30	2.38
A1	0	–	0.10
A2	0.90	1.01	1.10
b	0.71	0.76	0.86
b1		0.76	
b2	5.13	5.33	5.46
c	0.47	0.50	0.60
c1	0.47	0.50	0.60
D	6.0	6.10	6.20
D1	–	5.30	–
E	6.50	6.60	6.70
E1	–	4.80	–
e		2.286BSC	
H	9.70	10.10	10.40
L	1.40	1.50	1.70
L1	0.90	–	1.25
L2		1.05	
L3		0.8	
ΦP		1.2	
θ	0°	–	8°
θ 1	5°	7°	9°
θ 2	5°	7°	9°

WildGoose Semiconductor