NO: 2026083103
Date: 2026/8/31

承认书
APPROVAL SHEET

客户 Customer ：

承认 APPROVAL BY ：

料号/客户 Part No/Customer	料号/厂家 Part No/Ruilong	系列 Series	容量/电压 Cap/WV	尺寸 ΦD*L(mm)	商标 Brand	加工形式 Lead Treatment
--	M6101M035C058RT	M6	100μF/35V	6.3*5.8	RLM6	SMD

承认后，请签回一份，在下正式订单前如未签回承认书，视同默认本公司的相关标准及技术指标 。
After approved, please sign back 1 Approval Sheet before order. If not, we will treat it as tacitly acknowledged and accepted our relative standard and technical index.

核准 Approver	校对 Checked	编制 Designer
李映汉	伍伟桥	谭艳

肇庆市瑞隆电子有限公司
Zhao Qing Ruilong Electronic Co. Ltd
中国广东省肇庆市端州区飞龙路
feilong road, duozhou, zhaoqing city, guangdong province, China
TEL: (0758) 2565446 FAX: (0758) 2565446

版本变更记录
History of Revision

承认变更栏	Customer specification	Proposed revision	Reason for revision	Date of revision
	客户承认	变更希望点	变更原因	变更日期
			初次发行	2026/8/31

M6 Series



- 导电聚合物混合型铝电解电容器Polymer hybrid aluminum electrolytic capacitor
- SMD类型:峰值260℃无铅回流焊接条件SMD type: lead free reflow soldering condition at 260℃ peak correspondence
- 通过RoHS认证RoHS compliant

◆ 规格表 Specifications

项目Items	特性参数Characteristics			
使用温度范围 Category temperture range	-55 ~ +105℃			
额定工作电压范围 Rated voltage range	16 ~ 80V			
静电容量允许偏差 Capacitance tolerance	±20%(M) (at 20℃,120Hz)			
漏电流 Leakage current	施加额定工作电压2分钟后读数，小于或等于规格值(at 20℃) I≤0.01CV 或10μA（取最大值） Less than or equal to the specified value. After 2 minutes application of rated Voltage at 20℃			
损耗角正切值tanδ Dissipation factor	Rated voltage (V)	16~80	(at 20℃,120Hz)	
	tanδ (Max.)	0.12		
温度特性 Low temperture characteristics (Max.impedance ratio)	Z(-25℃)/Z(+20℃)	≦ 2.0	(100KHz)	
	Z(-55℃)/Z(+20℃)	≦ 2.5		
耐久性 Endurence	105℃施加额定工作电压2000小时，恢复到20℃后，产品性能应满足以下要求 The specifications listed below shall be satisfied when the capacitors are restored to 20℃ after application of rated voltage for 2000 hours at 105℃.			
	Appearance	No significant damage		
	Capacitance change	≦±30% of the initial value		
	D.F.(tanδ)	≦200% of the specified value		
	ESR	≦200% of the specified value		
	Leakage current	≦The specified value		
耐湿负荷特性 Damp heat (Steady state)	在85℃ 温度，湿度85%RH的环境中，施加额定电压1000小时后，恢复到20℃后，产品性能应满足以下要求 The specifications listed below shall be satisfied when the capacitors are restored to 20℃after application of rated voltage for 1000 hours at 85℃,85% RH.			
	Appearance	No significant damage		
	Capacitance change	≦±30% of the initial value		
	D.F.(tanδ)	≦200% of the specified value		
	ESR	≦200% of the specified value		
	Leakage current	≦The specified value		
浪涌电压特性 Surge voltage	浪涌电压=额定电压× 1.15(V) Surge voltage=Rated voltage × 1.15(V) 在15℃~35℃环境中，按充电30秒；放电5分30秒，连续施加浪涌电压1000次(Rc=1kΩ)，待恢复后测试，应满足以下要求 The capacitors shall be subjected to 1000 cycles each consisting of charge with the surge voltages specified at 15℃~35℃ for 30 seconds through a protective resistor (Rc=1kΩ) and discharge for 5 minutes 30 seconds.			
	Appearance	No significant damage		
	Capacitance change	≦±30% of the initial value		
	D.F.(tanδ)	≦200% of the specified value		
	ESR	≦200% of the specified value		
	Leakage current	≦The specified value		
焊接耐热性 Resistance to soldering heat	按回流焊试验后，应满足于以下要求 Measurement for solder temperature profile shall be made at the capacitor top and the terminal.			
	Capacitance change	≦±10% of the initial value		
	D.F.(tanδ)	≦130% of the specified value		
	ESR	≦130% of the specified value		
	Leakage current	≦The specified value		

◆ 外形图Dimensions (mm)

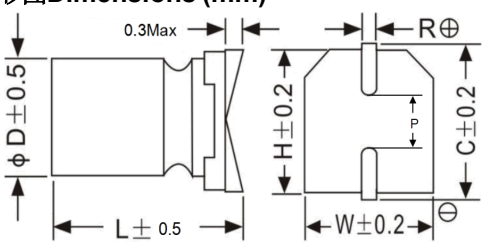

ΦD	W	H	C	R	P
5	5.3	5.3	5.9	0.5~0.8	1.4
6.3*4~7.7	6.5	6.5	7.2	0.5~0.8	2.2
6.3*8~15	6.5	6.5	7.2	0.7~1.1	2.2
8	8.3	8.3	9.0	0.7~1.1	3.1
10	10.3	10.3	11.0	0.7~1.1	4.5

基本特性参数表 Characteristics

Part No/Ruilong	Capacitance. (uF) 120Hz/+20℃	Capacitance Tolerance. (%) 120Hz/+20℃	Rated Voltage (VDC)	Surge Voltage (VDC)	tanδ 120Hz/+20℃	Leakage Current 2min(uA) +20℃	ESR 100KHz +20℃(mΩ)	Ripple Current. 100KHz (mArms)	Load Life (Hrs)	Dimensions(mm)						Colour
										ΦD	L	W	H	C	R	
M6101M035C058RT	100	±20	35	40.3	0.12	35	60	1400	2000	6.3	5.8	6.5	6.5	7.2	0.5~0.8	红色

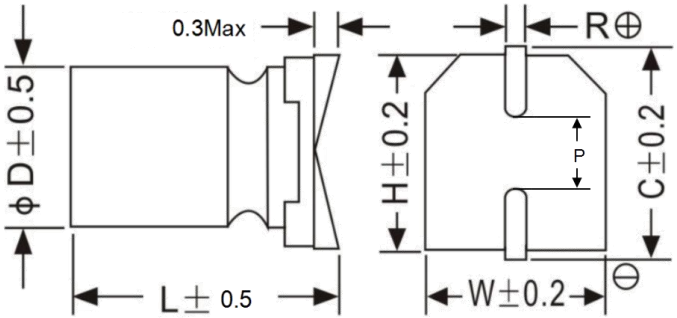

◆纹波电流补正系数 Rated Ripple Current Coefficient

频率Frequency(Hz)	120Hz≦F < 1KHz	1KHz≦F < 10KHz	10KHz≦F < 100KHz	100KHz≦F < 500KHz
系数Case code	0.05	0.30	0.70	1.00

◆料号说明 Explanation of parts numbers

E	2	4	7	1	M	6	R	3	C	0	8	0	R	L

系列 Series
E1
E2
E4
E5
H2
H4
H5
M1
M2
M4
M5
H6
H7

代码 Code	标称容量 Nominal Capacitance
R47	0.47μF
1R0	1μF
4R7	4.7μF
470	47μF
471	470μF
472	4700μF

代码 Code	误差 Tolerance
J	±5%
K	±10%
V	-10~+20%
M	±20%
Q	-10~+30%
T	-10~+50%
Z	-20~+80%
A	特殊 Special

代码 Code	电压 Voltage
2R5	2.5V
004	4V
6R3	6.3V
6R8	6.8V
7R5	7.5V
010	10V
012	12V
016	16V
020	20V
025	25V
035	35V
050	50V
063	63V
080	80V
100	100V
160	160V

代码 Code	直径Φ Dia
A	5
B	5.5
C	6.3
D	8
E	10
F	12.5
G	13

代码 Code	长 Length
050	5
058	5.8
070	7
077	7.7
080	8
090	9
098	9.8
120	12
126	12.6

代码 Code	颜色 Color
B	蓝色 Blue
R	红色 Red
G	灰色 Gary

代码 Code	产品脚型 Lead Forming Type
L	长脚 Bagged
T	贴片 SMD
C	剪脚品 Lead cut
P	编带 Taping

固态电容器结构图
The structure chart of solid electrolytic capacitors

电容器
Capacitor

素子展开图
Stretch Out View of Element

CP 线横向剖面图
Cross Section of Terminal

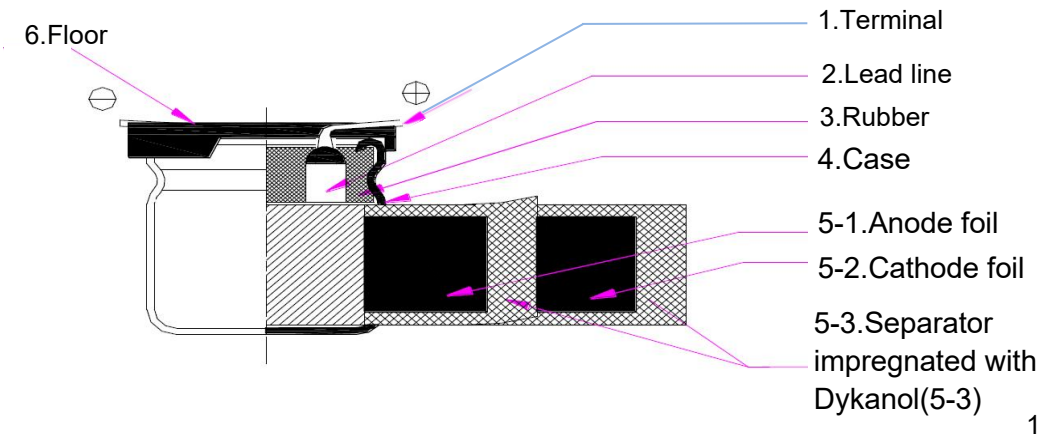

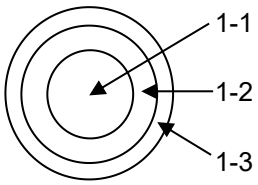

铁芯
1-1.Fe

镀铜层
1-2. Copper plate (≥10um)

镀锡层
1-3.Tin Plate(≥8um)

Item	组成材料 Component	材质 Materials	供应商 Vendor
1	CP线 Terminal	镀铜镀锡铁线 Tinned copper-ply wire	Japan-Funded Enterprises
2	引出线 Lead line	纯度为99.95%或99.97%的金属铝片 Aluminum, 99.95% or 99.97%	Ri hui
3	胶盖 Rubber	RE IIR 橡胶 RE IIR rubber	Lian Hua Xin
4	铝壳 Case	纯度为99.8%的金属铝 Aluminum, 99.8%	YI Peng、Xie Sheng
5-1	阳极箔 Anode Foil	纯度99.99%或99.98%的化成铝箔 Formed aluminum, 99.99% or 99.98%	JCC、Fu Qi
5-2	阴极箔 Cathode Foil	纯度99.7%或99.4%的腐蚀铝箔 Etched aluminum, 99.7% or 99.4%	Nanofoil
5-3	电解纸 Separator	马尼拉纸、纸浆、牛皮纸等 Manila,pulp,kraft,etc.	KAN、NKK
5-4	介质材料 Dykanol	聚3，4-乙烯基二氧噻吩 Poly3,4-Ethylene Dioxy Thiophene	Rui Long
6	底板 Floor	PPS	JS Co.(KOREA)

◆操作注意事项 Operating Precautions

1、极性Polarity

电容器是具有正负极的固态铝电解电容，使用中不可反接，若接反，则电容会因为漏电流不断增大或短路而造成寿命缩短。

RuilongCAP is a solid aluminum electrolytic capacitor with positive and negative electrodes. Do not reverse the polarity when using.If it is used with the polarities reversed, its life may shorten because of increasing leakage current or short circuit.

2、禁止电路 Prohibited circuits

因为焊接及其它动作可造成电容的漏电流增加，电容器不可使用在下列电路中：

Since problems can be expected due to leakage current increasing during soldering and other processes, Ruilong CAP cannot be used in the following circuits：

1)高阻抗电路 High impedance circuits；

2)耦合电路 Coupling circuits；

3)时间常数电路 Time constant circuits；

4)为提高耐电压而串联两个或多个电容于电路中

Connection of two or more capacitors in series for higher withstand voltage；

5)电路因漏电流过大而有坏的影响 Circuits to get bad influence by big leakage current

*除漏电流的波动上升外，电容的使用条件如在承认书中规定的高温和低温，温热和耐受性条件都会影响电容量。若电容作为时间常数电路使用，因其对电容量的变动的敏感性，电容量的改变会造成影响。若要将其作为时间常数电路使用，同时若因电压原因要串联多个电容，请联系敝司。

* In addition to the leakage current fluctuation above, the operational conditions such as characteristics at high and low temperature, damp heat and endurance stipulated in the specifications will affect the capacitance.The fluctuation of the capacitance may cause problem if it is used as a time constant capacitor, which is extremely sensitive to the fluctuation of the capacitance.Do not use it as a time constant capacitor.Additionally, please contact our company. for usage of two or more capacitor in series for voltage proof.

3、电压 Over voltage

电压若超过额定电压，即便只是一瞬间也可能造成短路

Over voltage exceeding the rated voltage may not be applied even for an instant as if may cause a short circuit.

4、突然充放电 Sudden charge and discharge

突然的充放电是不可取的（为了维持高的可靠性）。为防止突然的充放电造成电容短路或漏电增大，电路中应加上一个保护电路用以分流过大的电流。若瞬间电流超过10A或超过10倍允许纹波电流，要使用保护电路。在测试漏电流时请加上一个1kΩ的电阻用以充放电。

Sudden charge and discharge restricted(for maintenance of high-proof reliability). A protection circuit is recommended for when a sudden charge or discharge causes excessive rush current because this is a main cause of short circuits and large leakage current.Use protection circuits if the rush current exceeds 10A. The rush current exceeds 10×the maximum allowable ripple current of capacitor.Be sure to insert a protection resistor of about 1kΩ for charge and discharge when measuring the leakage current.

5、使用温度和纹波电流 Operating temperature and ripple current

如果电容器的使用温度超过了上限温度或是有过载纹波电流通过，则有较大可能使电容器寿命缩短，或漏电流增大，造成电容器失效。

If capacitor is used at a temperature higher than the upper category temperature, or excess ripple current flows through capacitor, there are high possibilities of life cycle reduction or leakage current increasing to cause capacitor defective.

6、漏电流 Leakage current

漏电流会因焊接条件而有些微的上升，加载直流电压可使电容自我修复，漏电流逐渐减小。

The leakage current of capacitor may increase slightly by soldering conditions. The application of DC voltage enables the capacitors to be repaired by itself and this leads the leakage current to be smaller gradually.

7、使用电压 Applied voltage

为了保证瑞隆电容器的可靠性，加载到瑞隆电容器上的电压最好小于其额定电压的80%。直流加交流电压的峰值应小于额定电压。

For the reliability of RuilongCAP, it is recommended that the voltage applied to RuilongCAP should beless than 80% of the rated voltage.Peak value of the the dc and ac voltage should not exceed its rated voltage.

◆ 标示 Marking

每个部品的表面或最小包装单位依下记事项不易消失的方法来标示.

The following items shall be marked indelibly and legibly on specimen or each unit pack.

1.系列和商标 Series and trademark.

2.静电容量 Capacitance

3.额定电压 Work voitage

4.负极性 Negative polarity

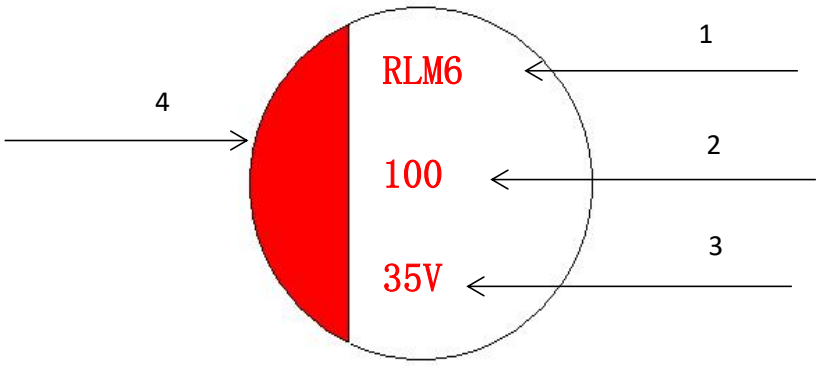

◆ 我司产品符合欧盟对有害物质限用之规定。

铅（Pb）	≤1000ppm
汞（Hg）	≤1000ppm
镉（Cd）	≤100ppm
铬（Cr）	≤1000ppm
多溴化联苯（PBBs）	≤1000ppm
多溴联苯醚（PBDEs）	≤1000ppm

◆ 无卤声明

我司产品符合下列卤素含量限制

溴（Br）	900ppm
氯（CL）	900ppm
溴（Br）+氯（CL）	1500ppm

注：

1.本承认书中所有数据如有异议，以中文为准。

2.在使用电解电容器时，请参考承认书内的使用标准，由于客户使用超出承认书相关参数和范围，如额定电压、额定纹波电流、温度等，不在我司质量保证范围内。

3.由于电路设计不当或缺陷造成的电解电容器损坏，不在我司质量保证范围内。

4.由于固态电容设计的特点不同，为不影响电容性能，要注意电容脚距的匹配性，在测试和使用时电容引脚不能受到机械外力引起电容脚距发生变化。