BORN SEMICONDUCTOR

# BNESDALC6V1W5

**ESD Protection Diode**

## Features

- 100Watts peak pulse power (tp = 8/20μs)
- Solid-state silicon-avalanche technology
- Low clamping Voltage
- Low leakage current
- Protection one data/power line
- IEC 61000-4-2 ±30kV contact ; ±30kV air
- IEC 61000-4-4 (EFT) 40A (5/50ns)
- IEC 61000-4-5 (Lightning) 8A (8/20μs)

## Package

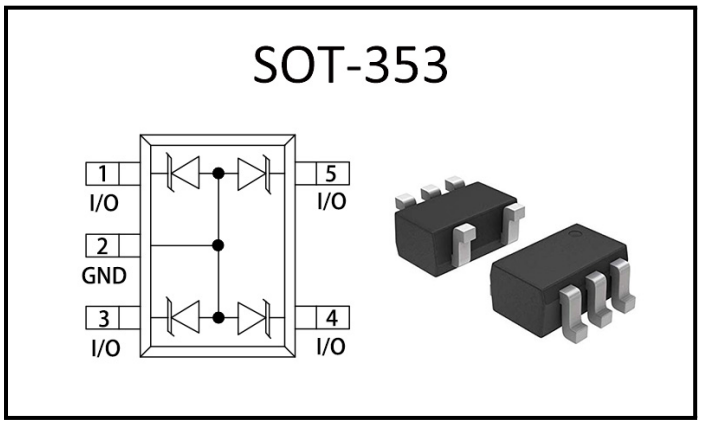


## Applications

- Cellular Handsets & Accessories
- Personal Digital Assistants (PDAs)
- SIM
- Notebook and PC Computers

## Mechanical Characteristics

- SOT-353 package
- Molding compound flammability rating: UL 94V-0
- Packaging: Tape and Reel
- RoHS/WEEE Compliant

## Marking

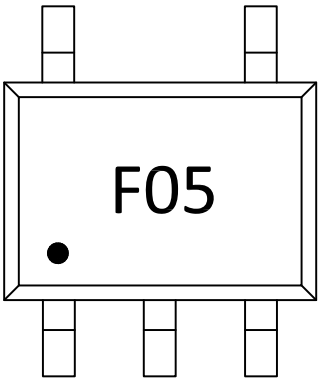


## Ordering information

| Order code | Package | Base qty | Delivery mode |
|---|---|---|---|
| BNESDALC6V1W5 | SOT-353 | 3k | Tape and reel |

*BORN SEMICONDUCTOR , INC. ALL RIGHT RESERVED*

Specifications are subject to change without notice.
Please refer to http://*www.born-tw.com* for current information.

**Revision: 2022-Jan-1-A**

# BNESDALC6V1W5

**ESD Protection Diode**

## Electrical Parameters ($T_A$ = 25°C unless otherwise noted)

| Symbol | Parameter |
|---|---|
| $I_{PP}$ | Maximum Reverse Peak Pulse Current |
| $V_C$ | Clamping Voltage @ $I_{PP}$ |
| $V_{RWM}$ | Peak Reverse Working Voltage |
| $I_R$ | Reverse Leakage Current @ $V_{RWM}$ |
| $V_{BR}$ | Breakdown Voltage @ $I_T$ |
| $I_T$ | Test Current |
| | |
| | |
| | |

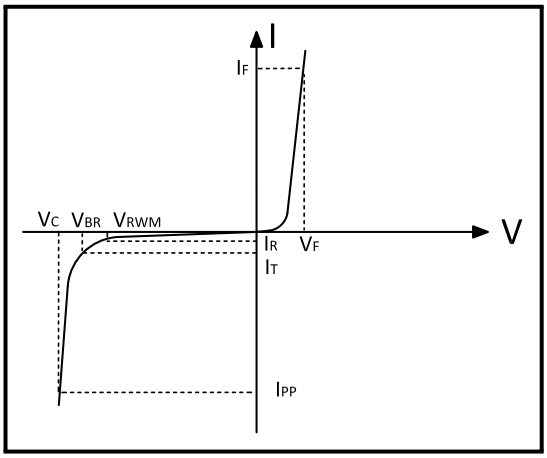


Note:8/20us pulse Waveform.

## Absolute Maximum Rating

| Rating | Symber | Value | Units |
|---|---|---|---|
| Peak Pulse Power ( tp =8/20μs ) | $P_{PP}$ | 100 | Watts |
| Peak Pulse Current (tp =8/20μs ) | $I_{PP}$ | 8.0 | A |
| ESD per IEC 61000-4-2 (Air)<br>ESD per IEC 61000-4-2 (Contact) | $V_{ESD}$ | 30<br>30 | KV |
| Lead Soldering Temperature | $T_L$ | 260(10seconds) | °C |
| Junction Temperature | $T_J$ | -55 to + 150 | °C |
| Storage Temperature | $T_{stg}$ | -55 to + 150 | °C |

## Electrical Characteristics

| Parameter | Symber | Conditions | Min. | Typ. | Max. | Units |
|---|---|---|---|---|---|---|
| Reverse Stand-Off Voltage | $V_{RWM}$ | – | – | – | 5.0 | V |
| Reverse Breakdown Voltage | $V_{BR}$ | $I_T$=1mA | 6 | – | 8.5 | V |
| Reverse Leakage Current | $I_R$ | $V_{RWM}$=5V,IO to GND | – | – | 0.2 | uA |
| Peak Pulse Current | $I_{PP}$ | tp =8/20us | – | – | 8.0 | A |
| Clamping Voltage | $V_C$ | $I_{PP}$=1.0A, tp =8/20us,IO to GND | – | – | 9 | V |
| Clamping Voltage | $V_C$ | $I_{PP}$=8.0A, tp =8/20us,IO to GND | – | – | 12 | V |
| Junction Capacitance | $C_j$ | $V_R$=0V,f=1MHZ,IO to GND | – | 60 | – | pF |

*BORN SEMICONDUCTOR , INC. ALL RIGHT RESERVED*

Specifications are subject to change without notice.
Please refer to http://*www.born-tw.com* for current information.

# BNESDALC6V1W5

**ESD Protection Diode**

## Typical Characteristics

### Figure 1: Peak Pulse Power vs. Pulse Time

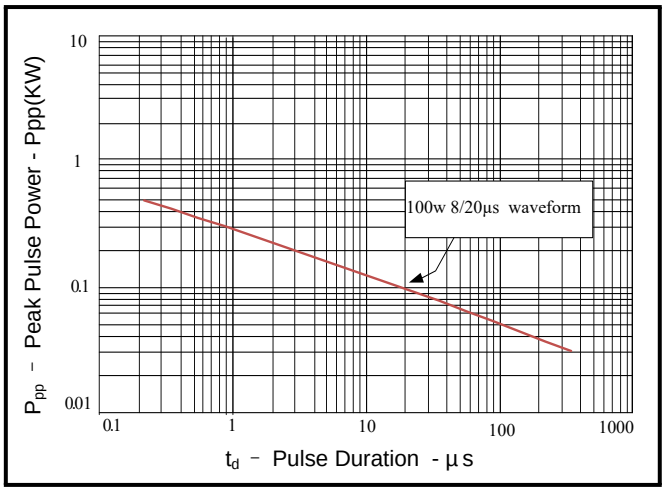


### Figure 2: Power Derating Curve

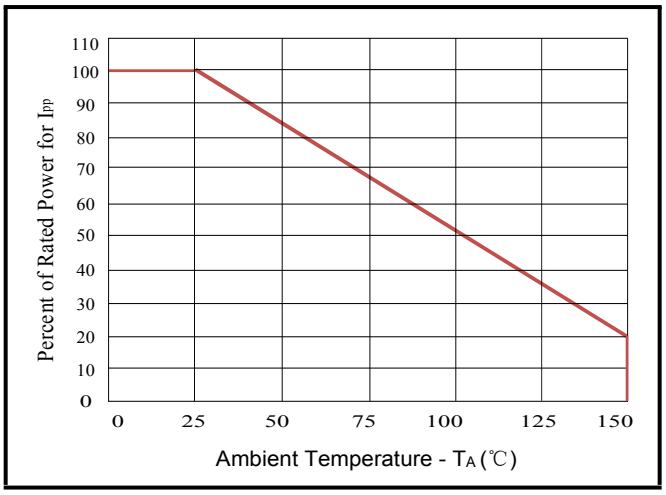


### Figure 3: Pulse Waveform

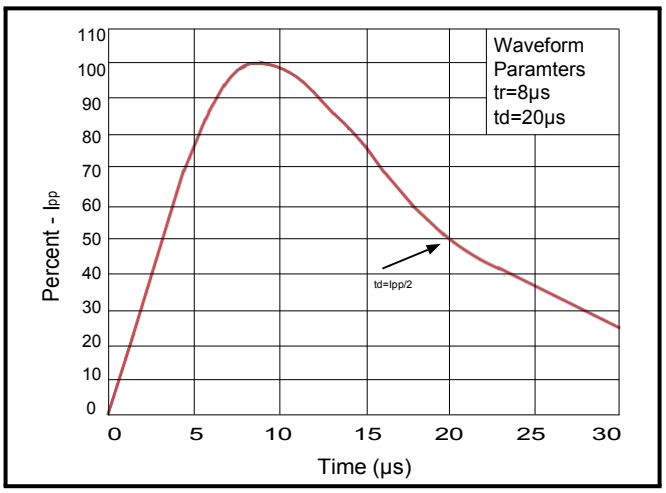


### Figure 4: Clamping Voltage vs. $I_{PP}$

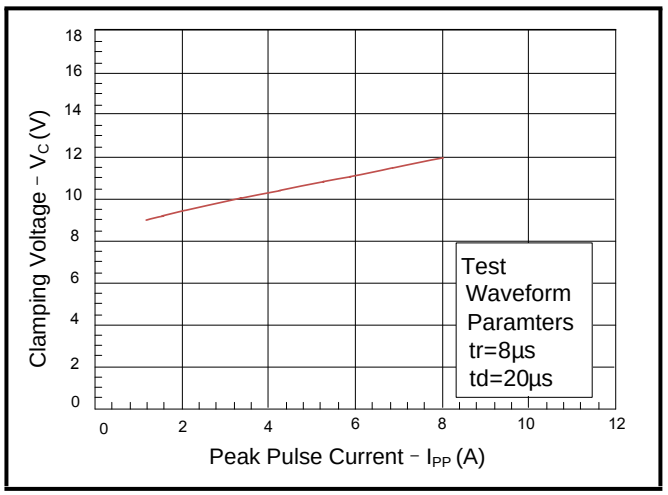


*BORN SEMICONDUCTOR , INC. ALL RIGHT RESERVED*

Specifications are subject to change without notice.
Please refer to http://*www.born-tw.com* for current information.

**Revision: 2022-Jan-1-A**

# BNESDALC6V1W5

**ESD Protection Diode**

## Outline Drawing – SOT-353

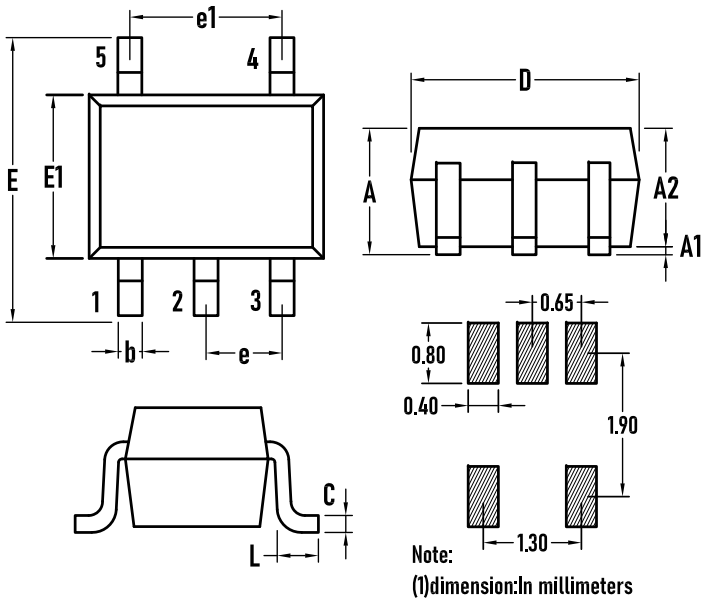


| SYMBOL | MILLIMETER | | |
|---|---|---|---|
| | MIN | TYP | MAX |
| A | 0.80 | – | 1.10 |
| A1 | 0.00 | – | 0.10 |
| A2 | 0.80 | 0.90 | 1.00 |
| b | 0.15 | 0.25 | 0.35 |
| C | 0.08 | – | 0.22 |
| D | 1.80 | 2.00 | 2.20 |
| E | 2.1 | 2.30 | 2.50 |
| E1 | 1.15 | 1.25 | 1.35 |
| e | 0.65BSC | | |
| e1 | 1.20 | 1.30 | 1.40 |
| L | 0.26 | 0.36 | 0.46 |
| θ | 0° | – | 8° |

## Packaging Tape - SOT-353

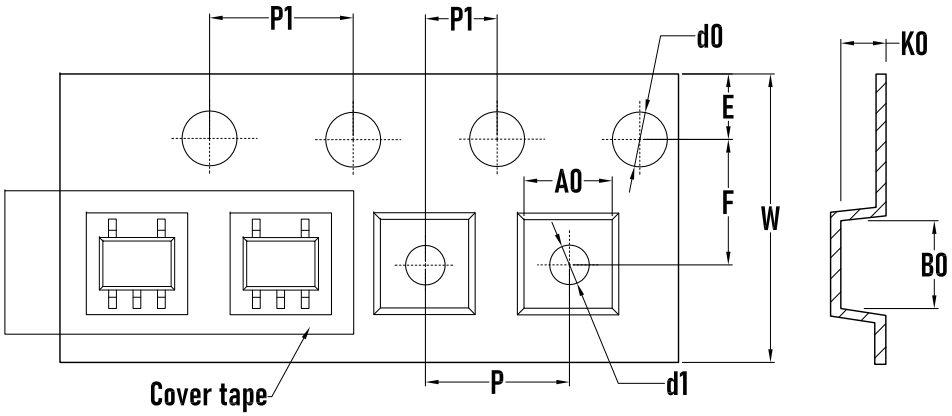


| SYMBOL | MILLIMETER |
|---|---|
| A0 | 2.25±0.1 |
| B0 | 2.55±0.1 |
| d0 | 1.50±0.1 |
| d1 | 1.0±0.1 |
| E | 1.75±0.1 |
| F | 3.50±0.1 |
| K0 | 1.20±0.1 |
| P | 4.00±0.1 |
| P0 | 4.00±0.1 |
| P1 | 2.00±0.1 |
| W | 8.00±0.1 |

## Packaging Reel

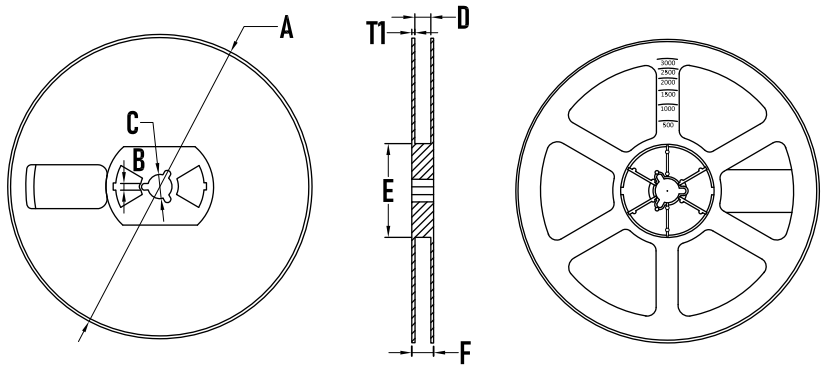


| SYMBOL | MILLIMETER |
|---|---|
| A | 177.8±0.2 |
| B | 2.7±0.2 |
| C | 13.5±0.2 |
| D | 9.6±0.3 |
| E | 54.5±0.2 |
| F | 12.3±0.3 |
| T1 | 1.0±0.2 |
| Quantity | 3000PCS |

*BORN SEMICONDUCTOR , INC. ALL RIGHT RESERVED*

Specifications are subject to change without notice.
Please refer to http://*www.born-tw.com* for current information.

**Revision: 2022-Jan-1-A**