BORN SEMICONDUCTOR

# BNIP4292CZ10-TBR

**ESD Protection Diode Array**

## Features

- 25Watts peak pulse power (tp = 8/20μs)
- Unidirectional configurations
- Solid-state silicon-avalanche technology
- Low clamping Voltage
- Low leakage current
- Low capacitance ($C_j$=0.3pF typ.I/O to I/O)
- Protection one data/power line
- IEC 61000-4-2 ±10kV contact ; ±12kV air
- Low clamping voltage:$V_{CL}$= 5.3V typ @ $I_{PP}$ =16A (TLP)
- IEC 61000-4-5 (Lightning) 5A (8/20μs)

## Package

DFN10L(2.5mmx1.0mm)

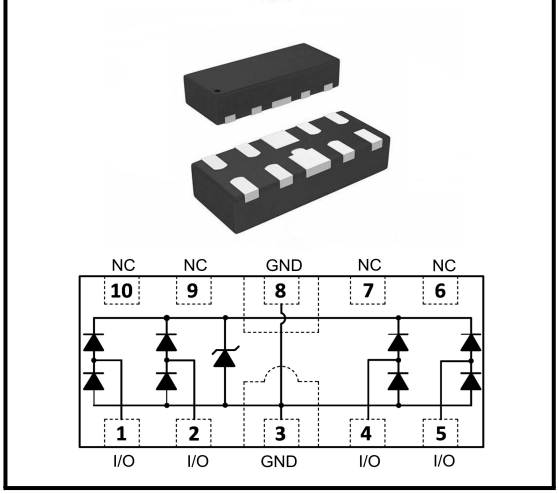


## Applications

- USB 3.0, USB3.1
- HDMI1.3,HDMI1.4 and HDMI2.0
- Very sensitive interface lines
- Notebooks, Desktops, and Servers
- Industrial equipment

## Mechanical Data

- Tiny DFN10L(2.5mmx1.0mm) package
- Molding compound flammability rating: UL 94V-0
- Packaging: Tape and Reel
- RoHS/WEEE Compliant

## Marking




## Ordering information

| Order code | Package | Base qty | Delivery mode |
|---|---|---|---|
| BNIP4292CZ10-TBR | DFN10L(2.5mmx1.0mm) | 3k | Tape and reel |

*BORN SEMICONDUCTOR , INC. ALL RIGHT RESERVED*

Specifications are subject to change without notice.
Please refer to http://*www.born-tw.com* for current information.

**Revision: 2022-Jan-1-A**

# BNIP4292CZ10-TBR

**ESD Protection Diode Array**

## Electrical Parameters ($T_A$ = 25°C unless otherwise noted)

| Symbol | Parameter |
|---|---|
| $I_{PP}$ | Maximum Reverse Peak Pulse Current |
| $V_C$ | Clamping Voltage @ $I_{PP}$ |
| $V_{RWM}$ | Peak Reverse Working Voltage |
| $I_R$ | Reverse Leakage Current @ $V_{RWM}$ |
| $V_{BR}$ | Revers Breakdown Voltage |
| $V_T$ | Trigger Voltage |
| $I_H$ | Holding Current |
| $V_H$ | Holding Voltage |

Note:8/20us pulse Waveform.

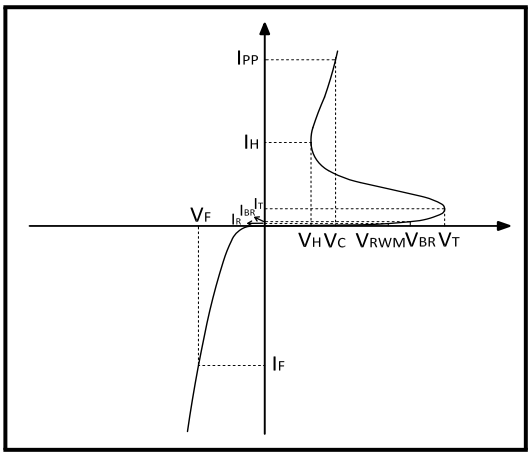


## Absolute Maximum Rating

| Rating | Symber | Value | Units |
|---|---|---|---|
| Peak Pulse Power ( tp =8/20μs ) | $P_{PP}$ | 25 | Watts |
| Peak Pulse Current (tp =8/20μs ) | $I_{PP}$ | 5 | A |
| ESD per IEC 61000-4-2 (Air)<br>ESD per IEC 61000-4-2 (Contact) | $V_{ESD}$ | 12<br>10 | KV |
| Lead Soldering Temperature | $T_L$ | 260(10seconds) | °C |
| Junction Temperature | $T_J$ | -55 to + 150 | °C |
| Storage Temperature | $T_{stg}$ | -55 to + 150 | °C |

## Electrical Characteristics

| Parameter | Symber | Conditions | Min | Typical | Max | Units |
|---|---|---|---|---|---|---|
| Reverse Stand-Off Voltage | $V_{RWM}$ | – | – | – | 5.0 | V |
| Holding Voltage | $V_H$ | $I_T$=1mA | 2.0 | – | 3.3 | V |
| Reverse Leakage Current | $I_R$ | $V_{RWM}$=5.0V,T=25°C | – | – | 0.5 | uA |
| Trigger Voltage | $V_T$ | – | – | 8.0 | – | V |
| Clamping Voltage | $V_{CL}$ | $I_{PP}$=16A, tp =100ns | – | 5.3 | 6 | V |
| Clamping Voltage | $V_C$ | $I_{PP}$=5A, tp =8/20us | – | 4 | 5 | V |
| dynamic resistance | $R_{dyn}$ | $T_{amd}$=25°C,$I_R$=10A | – | 0.3 | 0.4 | Ω |
| Junction Capacitance | $C_j$ | $V_R$=0V,f=1MHZ,I/O to I/O | – | 0.3 | – | pF |
| | | $V_R$=0V,f=1MHZ,I/O to GND | – | 0.55 | – | |

*BORN SEMICONDUCTOR , INC. ALL RIGHT RESERVED*

Specifications are subject to change without notice.
Please refer to http://*www.born-tw.com* for current information.

# BNIP4292CZ10-TBR

**ESD Protection Diode Array**

## Typical Characteristics

### Figure 1: Clamping Voltage vs. IPP

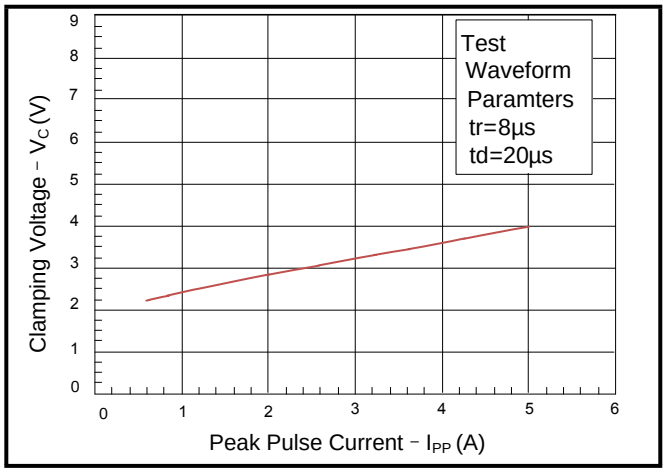


### Figure 2: Peak Pluse Power vs. Pluse Time

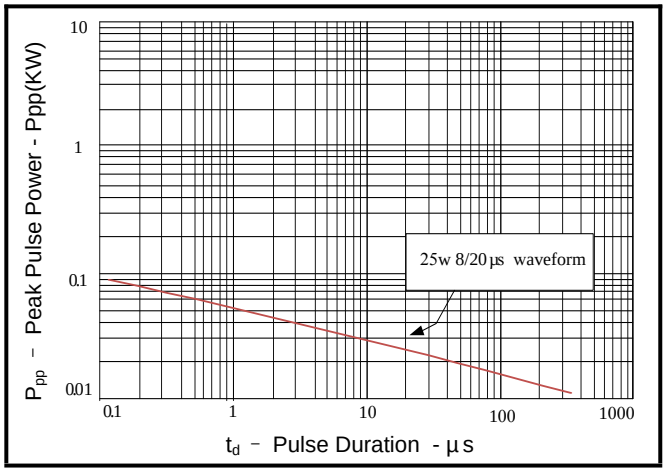


### Figure 3: Positive Clamping voltage (TLP)

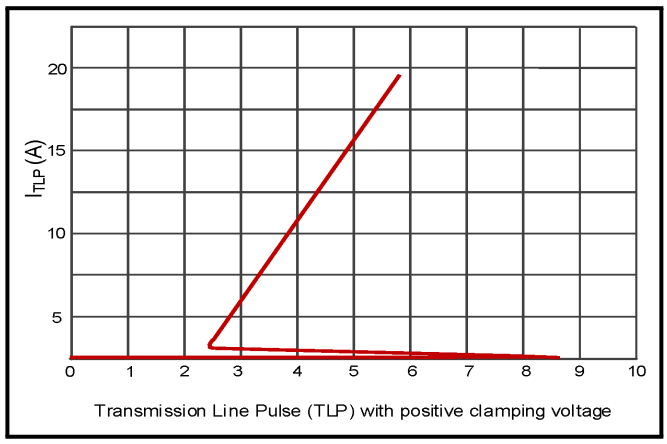


### Figure 4: Capacitance vs. Reverse Voltage

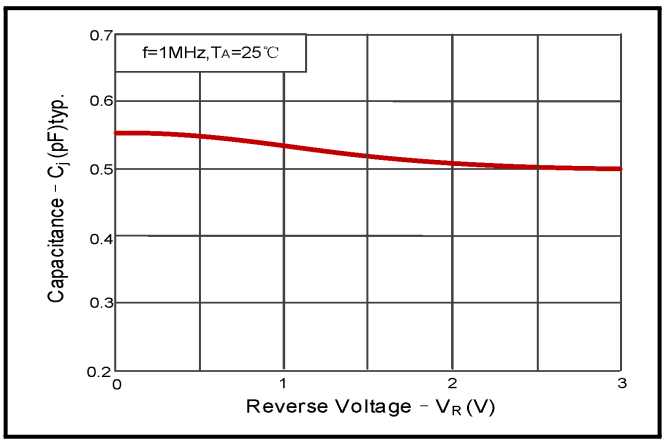


### Figure 5: IEC61000-4-2 : 8 kV positive pulse( I/O to GND)

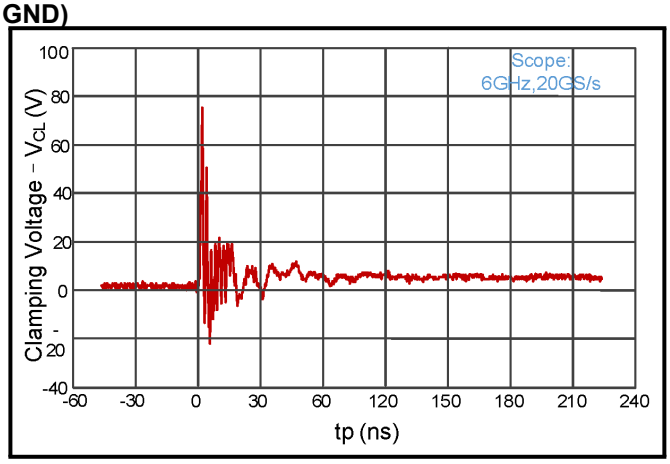


### Figure 6: IEC61000-4-2 : 8 kV positive pulse(GND to I/O)

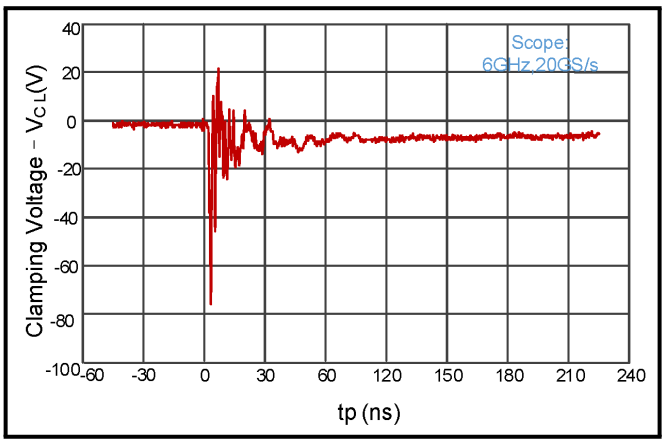


*BORN SEMICONDUCTOR , INC. ALL RIGHT RESERVED*

Specifications are subject to change without notice.
Please refer to http://*www.born-tw.com* for current information.

**Revision: 2022-Jan-1-A**

# BNIP4292CZ10-TBR

**ESD Protection Diode Array**

## Outline Drawing – DFN10L(2.5mmx1.0mm)

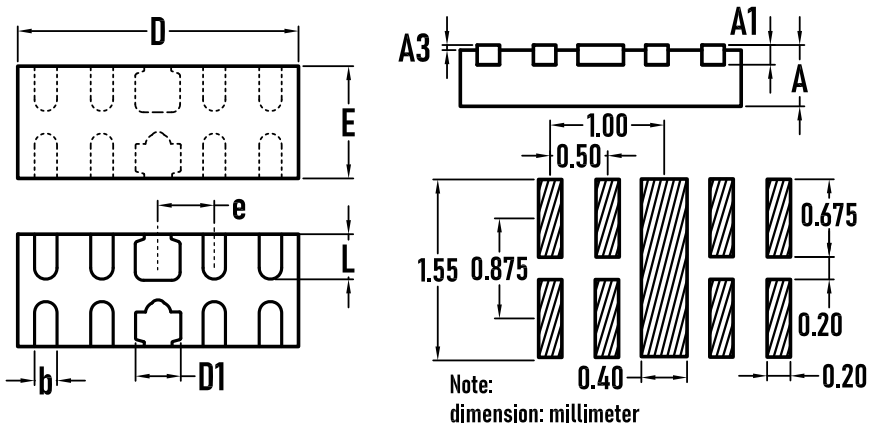


| SYMBOL | MILLIMETER | | |
|---|---|---|---|
| | MIN. | Typ. | MAX. |
| A | 0.45 | 0.50 | 0.55 |
| A3 | – | 0.02 | 0.05 |
| A1 | 0.10 | 0.15 | 0.20 |
| D | 2.45 | 2.50 | 2.55 |
| E | 0.95 | 1.00 | 1.05 |
| D1 | 0.35 | 0.40 | 0.45 |
| b | 0.15 | 0.20 | 0.25 |
| e | 0.50BSC | | |
| L | 0.35 | 0.40 | 0.45 |

## Packaging Tape - DFN2510-10L

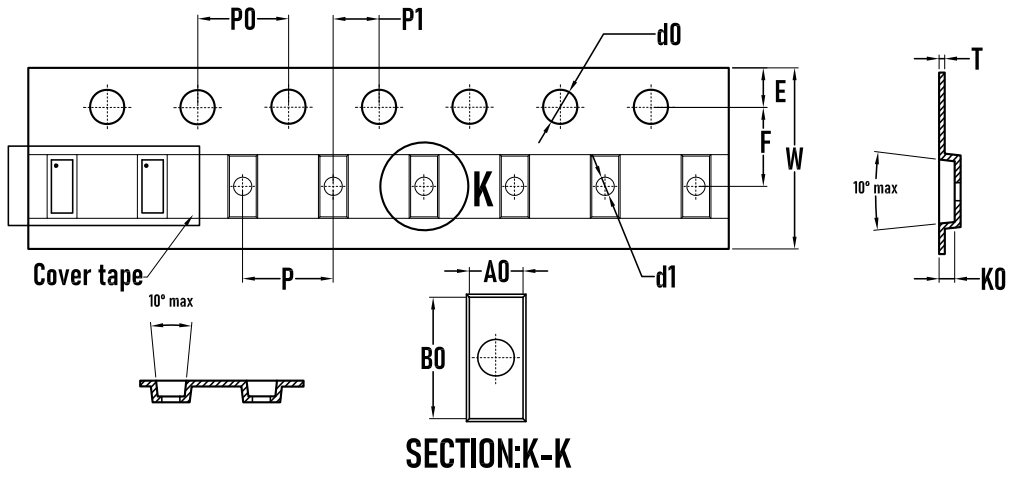


| SYMBOL | MILLIMETER |
|---|---|
| A0 | 1.2±0.05 |
| B0 | 2.7±0.05 |
| d0 | $1.5^{+0.1}_{-0}$ |
| d1 | 0.8±0.1 |
| E | 1.75±0.10 |
| F | 3.50±0.05 |
| K0 | 0.7±0.05 |
| P | 4.00±0.05 |
| P0 | 4.00±0.05 |
| P1 | 8.00±0.05 |
| W | $8.00^{+0.03}_{-0.01}$ |
| T | 0.22±0.03 |

## Packaging Reel

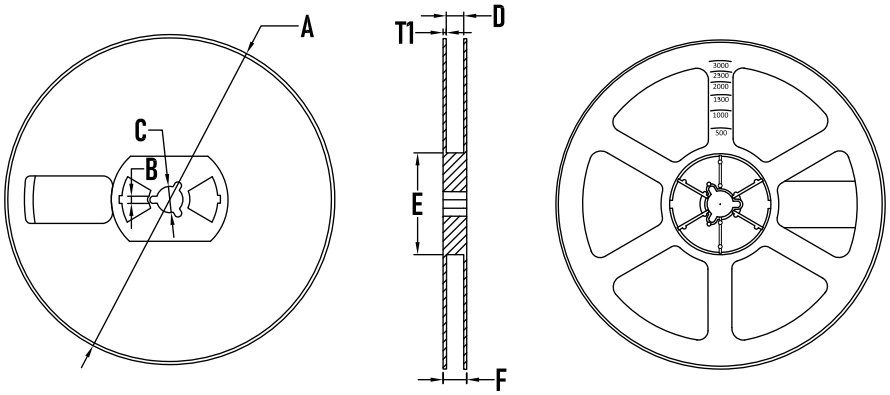


| SYMBOL | MILLIMETER |
|---|---|
| A | 178±1 |
| B | 3.5±0.2 |
| C | 14.3±0.2 |
| D | $9.8^{+2}_{-1}$ |
| E | 54.5±0.5 |
| F | 12.4±0.5 |
| T1 | 1.0±0.2 |
| Quantity | 3000PCS |

*BORN SEMICONDUCTOR , INC. ALL RIGHT RESERVED*

Specifications are subject to change without notice.
Please refer to http://*www.born-tw.com* for current information.

**Revision: 2022-Jan-1-A**