Modular Plug Connectors (Standard and Small Conductor)

NOTE
All numerical values are in metric units [with U.S. customary units in brackets]. Dimensions are in millimeters [and inches]. Unless otherwise specified, dimensions have a tolerance of ±0.13 [±.005] and angles have a tolerance of ±2°. Figures are for identification only.

1. INTRODUCTION

This specification covers the requirements for application of standard and small conductor modular plug connectors for voice and data applications. The modular plugs are available in standard and small conductor, unshielded or shielded, with 2, 4, 6, 8, or 10 terminals on 1.02 [.040] centerline spacing. These modular plugs are also available in line and keyed housing styles. The modular plugs contain universal terminals for use with solid or stranded wire.

Each modular plug features two internal strain reliefs to protect the modular plug-to-cable and terminal-to-conductor interface from damage when subjected to pulling or bending forces. The primary strain relief grips the jacket and the secondary strain relief acts on the conductors. These modular plugs are terminated using the insulation piercing technique. The modular plugs are available in loose piece for terminating with manual or pneumatically-powered tools.

Basic terms and features of this product are provided in Figure 1.

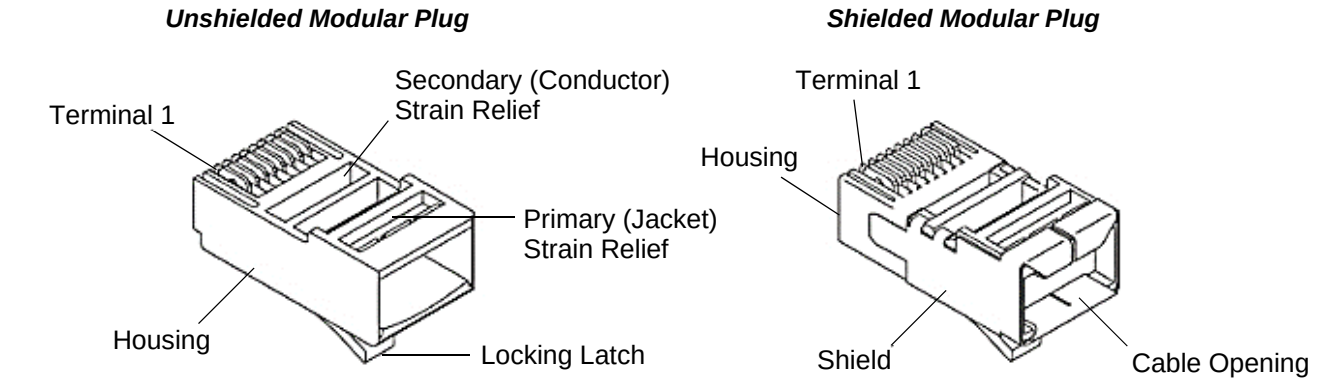

Figure 1

2. REFERENCE MATERIAL

2.1. Revision Summary

Revisions to this application specification include:

- Modified paragraph 1, modified paragraph 2.2 with new Catalog and Customer drawing numbers and updated product specification in paragraph 2.3.
- Removed termination illustrations from figure 1, paragraph 2.3, instruction sheet from paragraph 2.5, UL rating from paragraph 3.1 and CSA file from section 4.
- Restructured paragraph 2-3 and associated sub-sections, modified and/or removed info., revised figure 2 and added new table 1
- Removed 408-3151 info. in paragraph 2.4, reference to chordal hand tool in 5.1 and removed related figure of hand tool in Figure 8.

2.2. Customer Assistance

Reference product catalog series and drawing numbers:

- MP-88_-_-_ Customer drawing number 2843005

© 2015 CommScope, Inc.
All rights reserved

- MP-66_-_-_ Customer drawing number 2843026
- MP-6__-_-_ Customer drawing number 2843025
- MP-44U-_-_ Customer drawing number 2843027
- MP-1010U-R-_ Customer drawing number 2843028

These catalog series represent standard and small conductor modular plug connectors. Additionally, the number of contacts vary based on the catalog series selected. Use this information to obtain catalog number/ material number and tooling information.

2.3. Specifications

Product Specification 108-131013 provides product performance and test information.

2.4. Instructional Material

Instruction sheets (408-series) provide product assembly instructions or tooling setup and operation procedures and customer manuals (409-series) provide machine setup and operating procedures. Instructional material that pertains to this product is:

408-4093	PRO-CRIMPER* III Hand Tool Assembly 58560-1 (for 10-Position Modular Plugs)
408-4167	PRO-CRIMPER III Hand Tool Assembly 224928-1 (for External Strain Relief Application)
408-4389	Crimp Height Gage 904170-1
408-9743	Terminating Modules 856196-[ ] for Use with Modular Plug Dual Terminators 1320840-[ ]
408-9767	Modular Plug Hand Tools (Premium Grade) 231652-[ ]
408-9919	Modular Plug Single Terminators 354711-[ ] and Tooling Kits 354714-[ ]
409-10010	Modular Plug Dual Terminators 1320840-[ ]

3. REQUIREMENTS

3.1. Material

Modular plug housings are made of flame retardant polycarbonate. The terminals are made of phosphor bronze under-plated with nickel; terminal area is plated with gold or palladium nickel and gold. Shields are made of brass plated with bright tin-lead and under-plated with copper or stainless steel plated with nickel. External strain reliefs are made of brass plated with tin and under-plated with copper.

3.2. Storage

3.2.1. Ultraviolet Light

Prolonged exposure to ultraviolet light may deteriorate the chemical composition used in the product material.

3.2.2. Shelf Life

The product should remain in the shipping containers until ready for use to prevent deformation to components. The product should be used on a first in, first out basis to avoid storage contamination that could adversely affect performance.

3.2.3. Chemical Exposure

Do not store product near any chemical listed below as they may cause stress corrosion cracking in the material.

Alkalies	Ammonia	Citrates	Phosphates Citrates	Sulfur Compounds
Amines	Carbonates	Nitrites	Sulfur Nitrites	Tartrates

3.3. Cable Selection and Preparation

3.3.1. Selection

The modular plugs accept the wire described below.

Description	Conductor (AWG)[1]	Insulation OD	Cable Type	Cable Jack OD (Max)	Strip Length
Unshielded 8-Postion	24-26 Solid 24-26 Stranded	0.034" to 0.039" (0.86 to 0.99mm)	Round	0.20" (5.1mm)	12.7-14.3 [.50-.56]
			Flat Oval	0.10" x 0.35" (2.54 x 8.89 mm)	12.7-14.3 [.50-.56]
Shielded 8-Position			Round	0.20" (5.1mm)	14.3 [.56]
			Flat Oval	0.10" x 0.35" (2.54 x 8.89 mm)	14.3 [.56]
Unshielded 8-Postion, Small Conductor	26-28 Solid 26-28 Stranded	0.029" to 0.034" (0.74 to 0.86mm)	Round	0.20" (5.1mm)	14.3 [.56]
			Flat Oval	0.10" x 0.35" (2.54 x 8.89 mm)	14.3 [.56]
Unshielded Keyed, 8-Postion	24-26 Solid 24-26 Stranded	0.034" to 0.039" (0.86 to 0.99mm)	Round	0.20" (5.1mm)	12.7-14.3 [.50-.56]
Shielded Keyed, 8-Position					14.3 [.56]
Unshielded 6-Postion, Standard Body	24-26 Solid 24-26 Stranded	0.034" to 0.039" (0.86 to 0.99mm)	Round	0.18" (4.6mm)	6.35-7.14 [.25-.28]
			Flat Oval	0.09" x 0.26" (2.29 x 6.61 mm)	6.35-7.14 [.25-.28]
Unshielded 6-Postion, Long Body			Round	0.195" (4.96mm)	14.3 [.56]
			Flat Oval	0.11" x 0.27" (2.79 x 6.85 mm)	14.3 [.56]
Shielded 6-Position, Long Body			Round	0.195" (4.96mm)	14.3 [.56]
			Flat Oval	0.11" x 0.27" (2.79 x 6.85 mm)	14.3 [.56]
Unshielded 6-Postion, Small Conductor, Standard Body	26 -28 Solid 26 -28 Stranded	0.029" to 0.034" (0.74 to 0.86mm)	Flat Oval	0.09" x 0.26" (2.29 x 6.61 mm)	6.35-7.14 [.25-.28]
Unshielded 6-Postion, 4-Contacts	24-26 Solid 24-26 Stranded	0.034" to 0.039" (0.86 to 0.99mm)	Flat Oval 0.09" x 0.26" (2.29 x 6.61 mm)		6.35-7.14 [.25-.28]
	26 -28 Solid 26 -28 Stranded	0.029" to 0.034" (0.74 to 0.86mm)			
Unshielded 6-Postion, 2-Contacts	24-26 Solid 24-26 Stranded	0.034" to 0.039" (0.86 to 0.99mm)			
Unshielded 4-Postion, Headset	24-26 Solid 24-26 Stranded	0.034" to 0.039" (0.86 to 0.99mm)	Round	0.11" (2.8mm)	6.35-7.14 [.25-.28]
			Flat Oval	0.09" x 0.19" (2.29 x 4.83 mm)	6.35-7.14 [.25-.28]
Unshielded 10-Postion,	24-26 Solid 24-26 Stranded	0.034" to 0.039" (0.86 to 0.99mm)	Round	0.21" (5.3mm)	12.7-14.3 [.50-.56]

Note 1: Typical conductor size supported by insulation OD. Insulation OD is the determining specification.

Table 1

3.3.2. Preparation

Proper strip length as shown in Figure 2 is necessary to properly insert the cable into the modular plugs. The strip length for the cable and specific cable and modular plug combinations are shown in Table 1.

NOTE
Reasonable care must be taken not to nick or cut the cable conductor insulation during the stripping operation.

Flat Oval Shielded Cable

This cable must be prepared according to the following. Refer to Figure .

3.3.2.1.1.1.1. Insert a blade tip between the conductors and shield. Slit the jacket and shield 14.29 [9/16] back from the end along one edge of the cable. Repeat on the opposite cable edge.

3.3.2.1.1.1.2. Pull the slit ends away from the conductors. Separate the shield from the slit ends of the jacket.

3.3.2.1.1.1.3. Cut off the slit ends of the jacket 14.29 [9/16] from the end of the conductors. Care should be taken not to cut shield ends.

3.3.2.1.1.1.4. Fold each shield end back on itself to approximately one-half of its length.

3.3.2.1.1.1.5. Bend each folded shield back on top of the jacket. The shield must extend approximately 9.52 [3/8] back on the jacket and the exposed conductors must be approximately 14.29 [9/16] in length.

3.3.2.1.1.1.6. If the drain wire is to be terminated within the modular plug, insert the drain wire into the wire circuit of the modular plug, and terminate according to the instructions packaged with the applicable tooling.

3.3.2.1.1.1.7. If the drain wire is to be terminated to the modular plug shield, bend the drain wire back tightly across the center of the cable shield on the side of the cable that will face the locking latch side of the modular plug when the cable is inserted. Cut the drain wire to the same length as the cable shield.

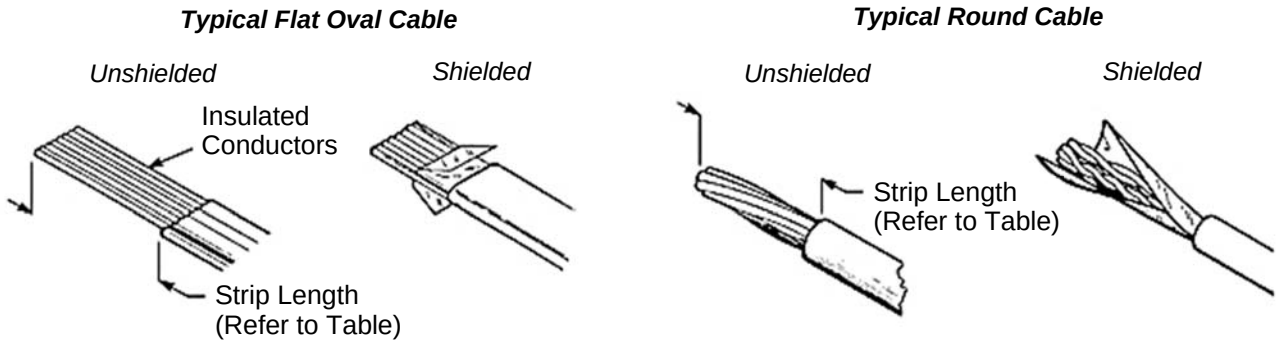

Figure 2

Round Shielded Cable

This cable must be prepared according to the following. Refer to Figure .

(a) Insert a blade tip between the shield and jacket. Slit the jacket 15.88 [5/8] back from the end.

3.3.2.1.1.1.8. Pull the jacket away from the shield, and fold it back over the cable. Cut off the slit portion of the jacket 15.88 [5/8] from the end of the conductors. Care shall be taken not to cut the shield.

3.3.2.1.1.1.9. Find the overlap seam in the shield, and pull the shield away from the conductors while being careful not to damage the shield.

3.3.2.1.1.1.10. Fold the shield back over the cable.

Flat Oval Shielded Cable

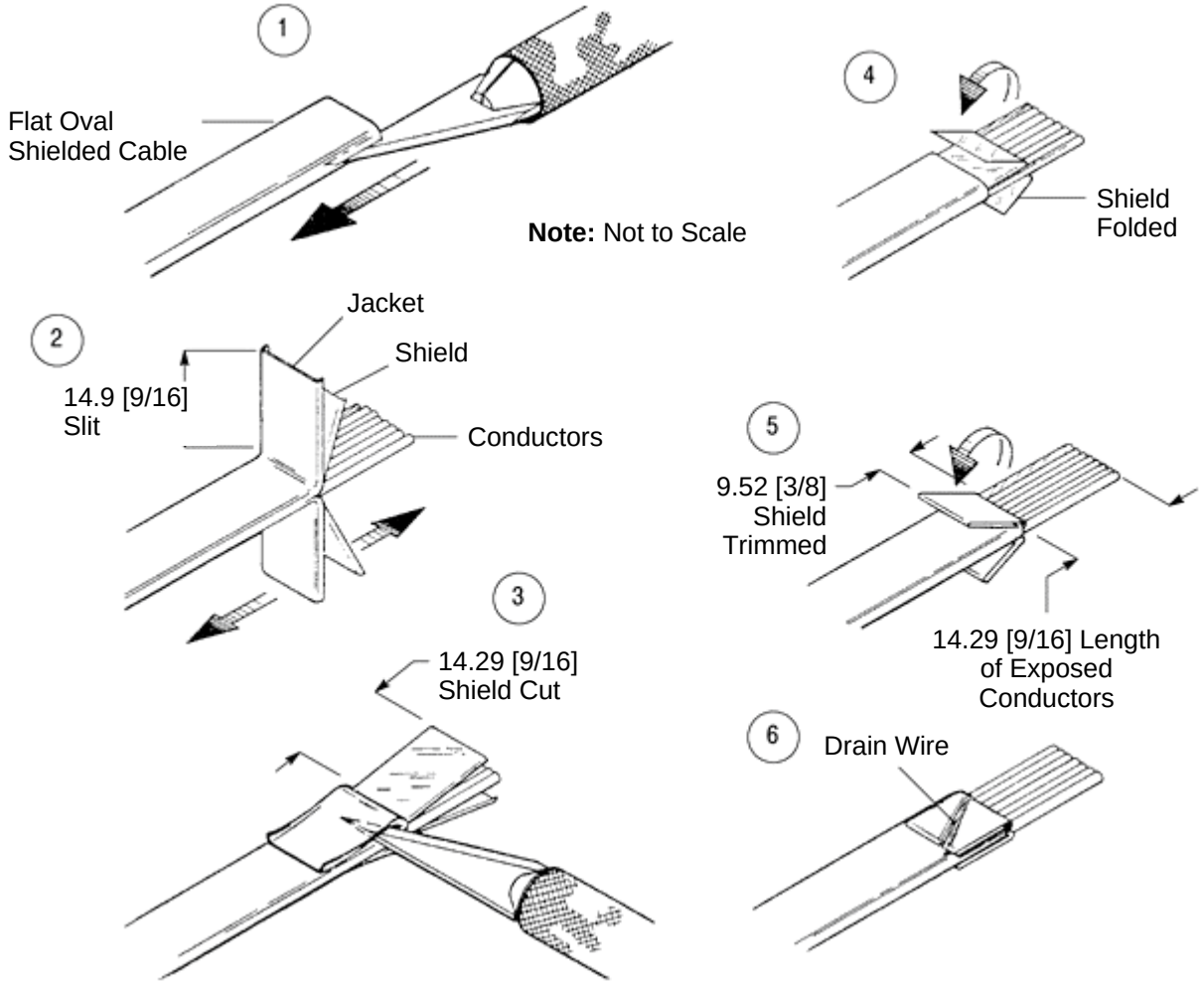

Figure 3

3.3.2.1.1.1.11. Trim the shield to approximately a length of 9.52 [3/8]. Form the shield smoothly around the outside of the cable. Untwist the conductors and orient them in desired sequence. Trim the conductors evenly to a length of 14.29 [9/16].

3.3.2.1.1.1.12. If the drain wire is to be terminated within the modular plug, insert the drain wire into the wire circuit of the modular plug, and terminate according to the instructions packaged with the applicable tooling.

3.3.2.1.1.1.13. If the drain wire is to be terminated to the modular plug shield, bend the drain wire back tightly across the center of the cable shield on the side of the cable that will face the locking latch side of the modular plug when the cable is inserted. Cut the drain wire to the same length as the cable shield.

Round Shielded Cable

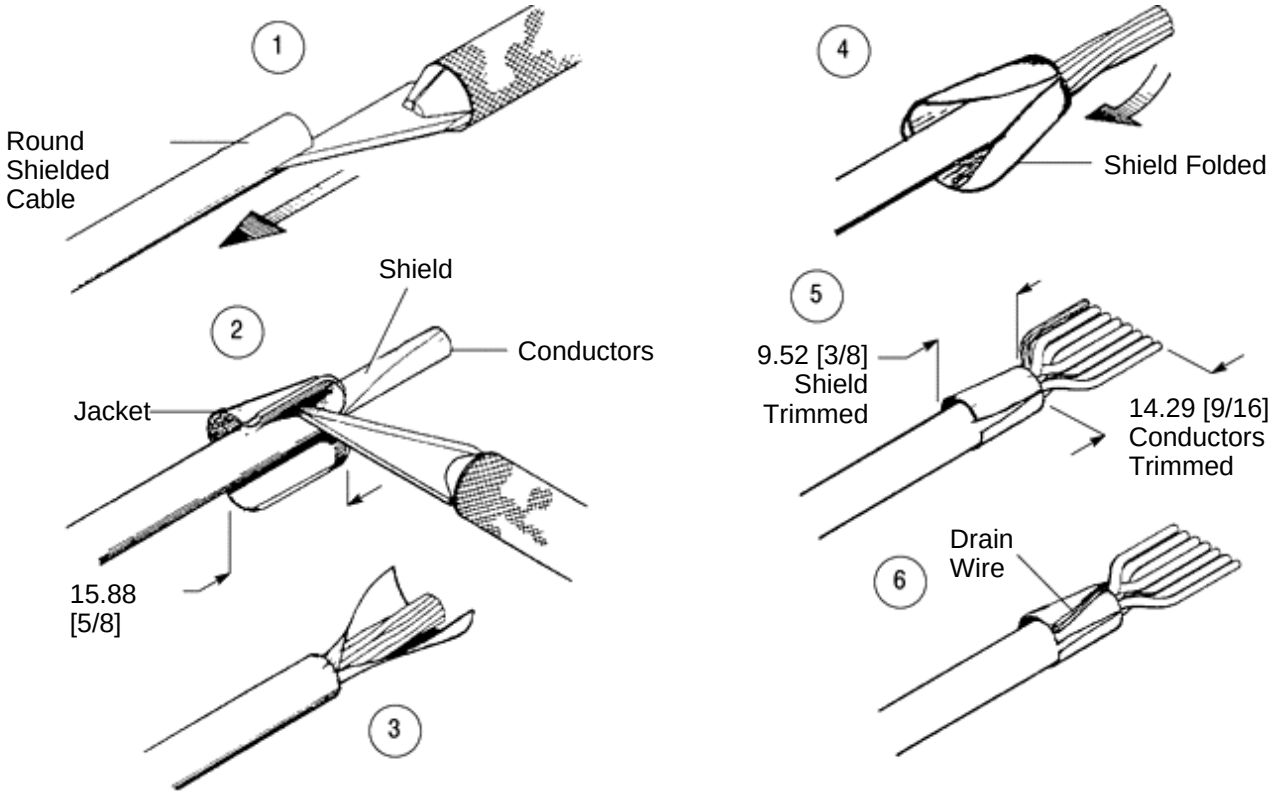

Figure 4

3.4. Termination Requirements

3.4.1. Conductor Location

Conductors must be fully inserted into the proper wire circuit of the modular plug to ensure that the terminals pierce a sufficient wire area. It is preferred that all conductors be visually bottomed against the end of the wire circuits. If individual conductors are not completely inserted after termination, they must be inserted at least past the terminal and into the reference zone to ensure a proper electrical interface. See Figure 5.

3.4.2. Crimp Height

The crimp height shall be measured from the top of the terminals to the bottom of the housing (not including locking tab) and must be within the dimension provided in Figure 5.

NOTE
All terminals must be at approximately the same height. A crimp height gage is available for measuring modular plug crimp height (refer to Section 5 for part number and description).

3.4.3. Internal Strain Reliefs

The primary strain relief must be fully engaged on the cable jacket, and the secondary strain relief must be fully engaged on the cable conductors. Both strain reliefs must be fully engaged to isolate the termination area from external forces applied to the cable. It is acceptable for the primary strain relief to cut into the jacket as long as the conductor insulation is not compromised. See Figure 5.

NOTE
For unshielded modular plug, the primary and secondary strain reliefs can be visually inspected through the side of the housing.

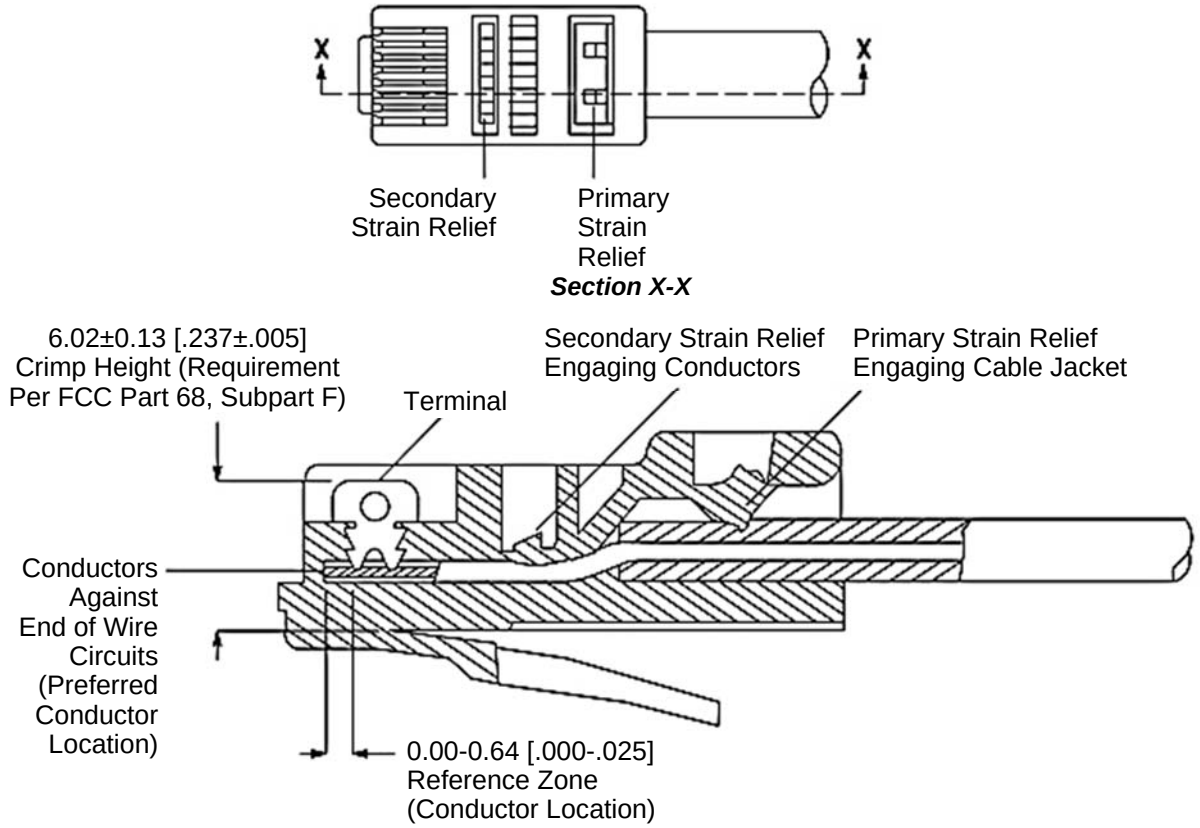

Figure 5

3.5. Ancillary Items

3.5.1. External Strain Relief

NOTE
The external strain relief can only be used with select 8- and 10-position (shielded and unshielded) modular plugs.

The external strain relief provides a secure grip (360º wrap) on the cable jacket for extraordinary strain relief on the cable and a redundant low impedance ground path to equipment. For shielded modular plugs, the external strain relief also provides a secure grip on the foil shield and a chassis ground through the modular plug shield. If a boot is used, an external strain relief containing a retention hole for securing the boot is available (the boot must be installed after the external strain relief with retention hole).

NOTE
Using the boot and the external strain relief with retention hole will provide optimum strain relief performance.

Assembly of the external strain relief onto the modular plug must meet the requirements given in Figure 6.

3.5.2. Boot

A boot is used to prevent the cable from kinking and bending too sharp at the modular plug cable opening. The boot is available with or without a hood. The hooded boot also prevents the modular plug locking latch from snagging other locking latches or cables.

The boots are available to fit maximum cable insulation diameters of 5.33 [.210] for unshielded modular plugs and 5.72 [.225] for shielded modular plugs. The maximum cable diameter is marked on the inside of each boot. The boots are colored to provide a color-coded cable configuration to ensure appropriate connections. The boot must be installed, small diameter end first, onto the cable before the stripping procedure. Boots are made of elastomer polyolefin. Refer to Figure 7.

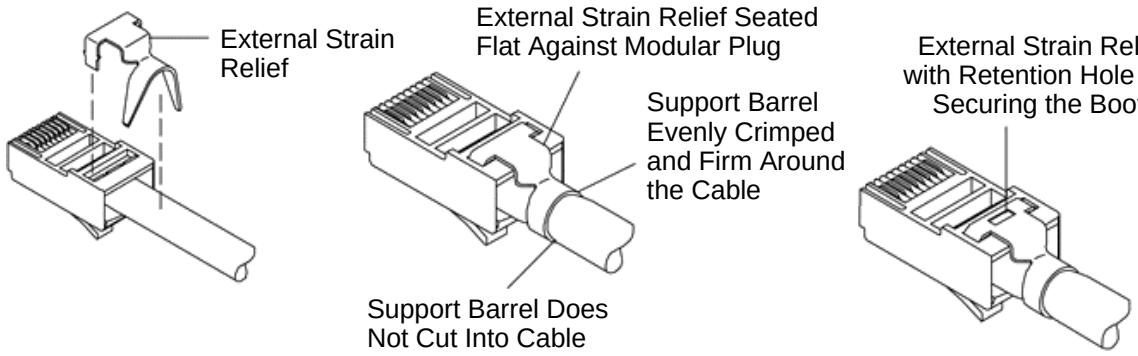

Figure 6

NOTE
Some modular plugs (including categories 6A, 6, and some 5e) require custom fit slim-line boots. These boots are made of clear plastic, which allows the cable color to be visible after installation. The slim-line boot must be installed on the cable before wiring the modular plug and must be placed in final position before crimping. See Figure 7.

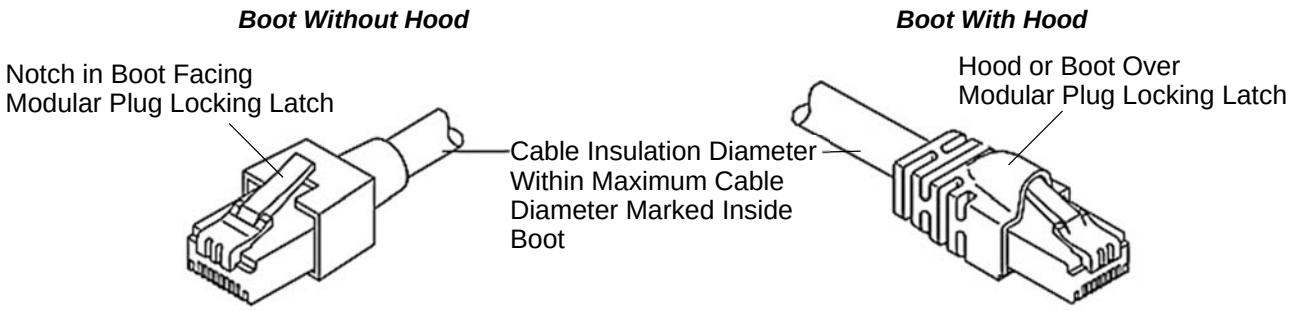

Figure 7

3.6. Mating

The modular plug must be inserted into the mating jack until it bottoms. When fully inserted, the modular plug locking tab will engage the jack housing and prevent the connectors from separating. The connectors will not unmate unless the modular plug locking latch is fully depressed. After mating, there will be a small amount of axial movement (travel) between the mated modular plug and jack, and with some combinations, depending on tolerance variations between original equipment manufacturers (OEM), could be up to 0.76 [.030].

3.7. Repair

These modular plugs cannot be repaired; damaged modular plugs must be removed and discarded. The cable must be cut from the modular plug and re-terminated onto a new modular plug.

4. QUALIFICATION

Standard and small conductor modular plug connectors are Component Recognized by Underwriters Laboratories Inc. (UL) in File E81956 (DUXR2).

5. TOOLING

Tooling part numbers and instructional material packaged with the tooling are shown in Figure 8.

5.1. Hand Tools

The premium grade modular plug hand tool terminates these modular plugs to all types of cable indicated in this document. The tool also cuts and strips unshielded flat oval cable. This tool is designed for field application, installation, and repair.

PRO-CRIMPER III hand tool assemblies are commercial grade tools designed primarily for field installation or repair. One tool terminates 10-position modular plugs and another tool applies the external strain relief.

5.2. Terminators

The terminators are pneumatically powered, bench-mounted tools controlled by a foot valve to terminate modular plugs to create a cable assembly. Terminating modules fit interchangeably into the dual terminators. During termination, the dual terminators test the assembly for electrical circuit continuity. The single terminators require a specific tooling kit to terminate one modular plug style and does not provide testing. These tools provide for high-volume applications.

5.3. Crimp Height Gage

The crimp height gage is used to measure the crimp height of the terminated modular plug. The crimp height gage is used for 2-, 4-, 6-, 8-, and 10-position modular plugs. Take note that the gage cannot be used for 4-position handset modular plugs. The gage consists of a connector nest and a GO/NO-GO spanner.

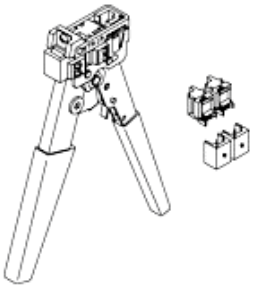

Modular Plug Hand Tools (Premium Grade) 231652-[ ] with Die Sets 853400-[ ] (408-9767)



PRO-CRIMPER III Hand Tool Assembly 58560-1 (for 10-Position Modular Plugs) (408-4093)

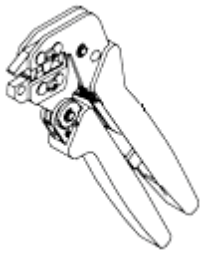

PRO-CRIMPER III Hand Tool Assembly 224928-1 with Die Assembly 224928-2 (for External Strain Relief Application) (408-4167)

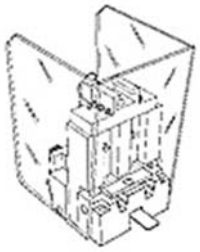

Terminating Modules 856196-[ ] for Use with Modular Plug Dual Terminators 1320840-[ ] (408-9743)

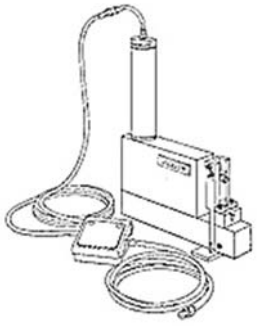

Modular Plug Single Terminators 354711-[ ] and Tooling Kits 354714-[ ] (408-9919)

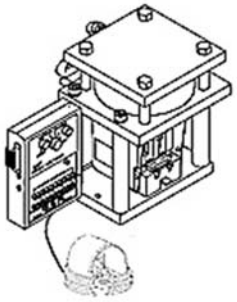

Modular Plug Dual Terminators 1320840-[ ] (409-10010)

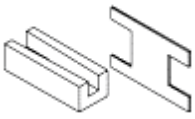

Crimp Height Gage 904170-1 (408-4389)

Figure 8

6. VISUAL AID

The illustration below shows a typical application of standard and small conductor modular plug connectors. This illustration should be used by production personnel to ensure a correctly applied product. Applications which do not appear correct should be inspected using the information in the preceding pages of this specification and in the instructional material shipped with the product or tooling.

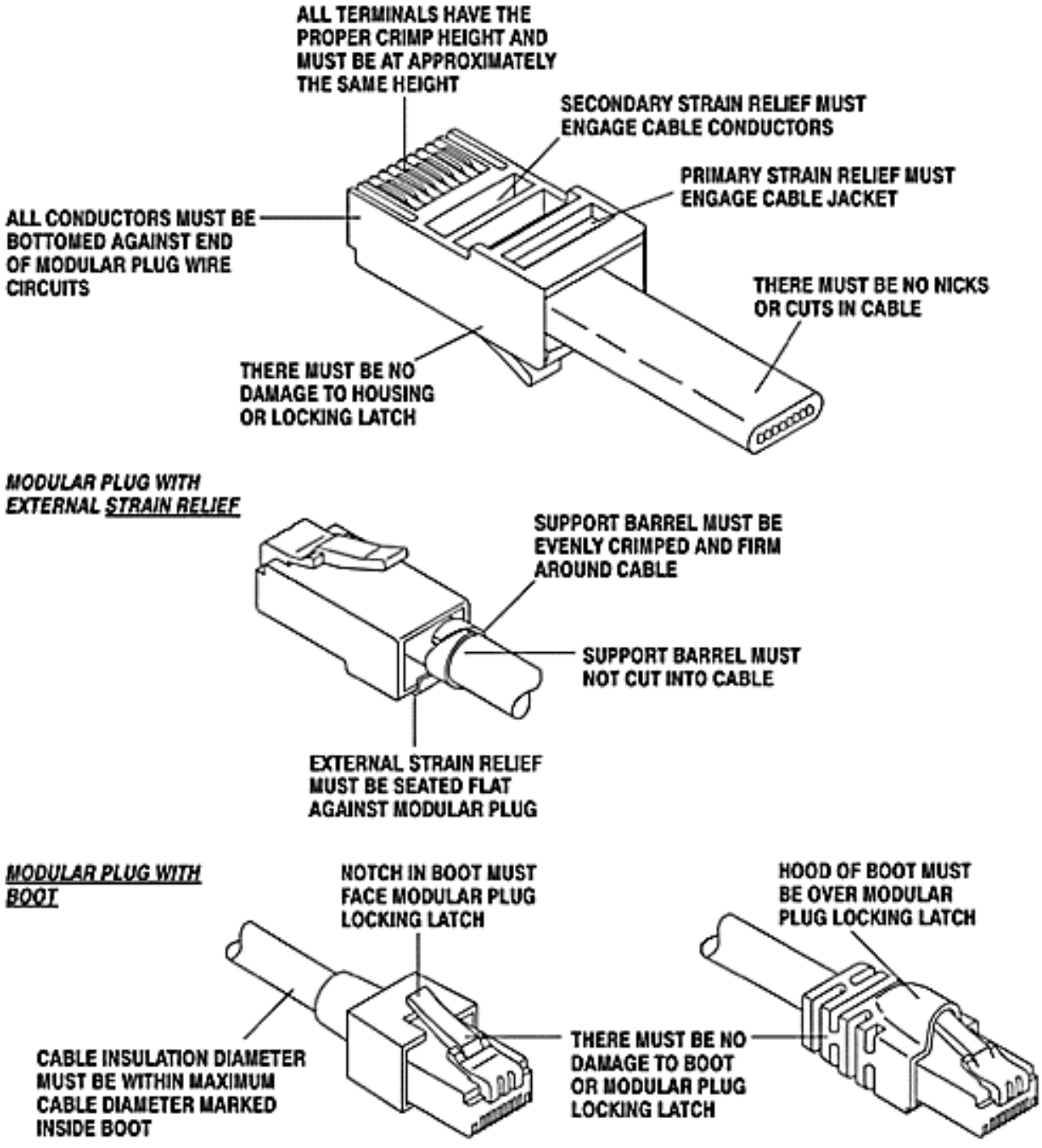

Figure 9