FEMALE PLUG M8 STRAIGHT TO MALE PLUG M12 STRAIGHT WSOR CABLES

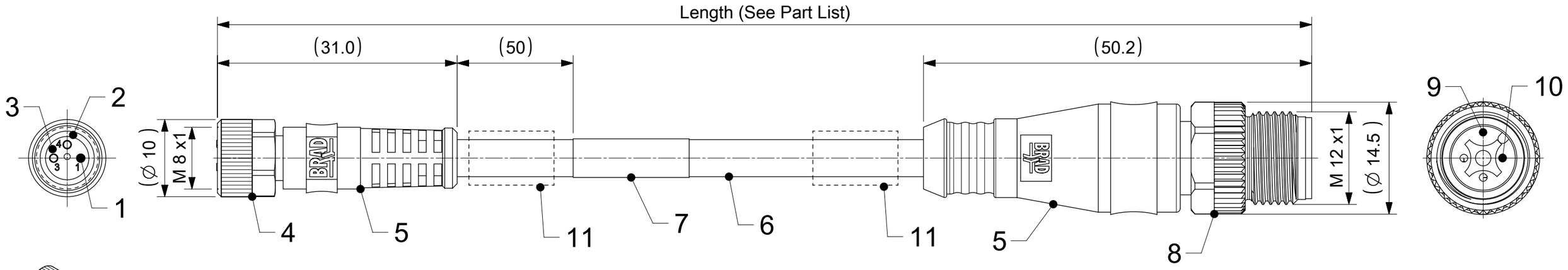

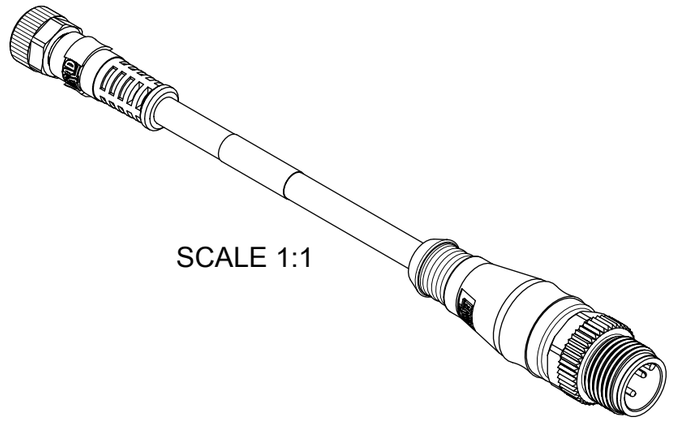

SCALE 1:1

CONTACTS POSITION FRONT VIEW:

	3 CONTACTS	4 CONTACTS	5 CONTACTS
M8 - FEMALE	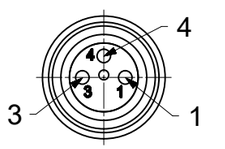	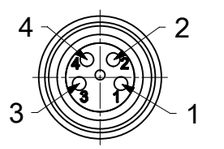	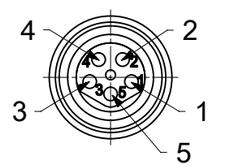
M12 - MALE	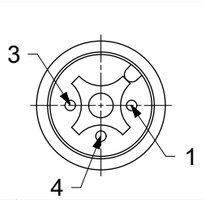	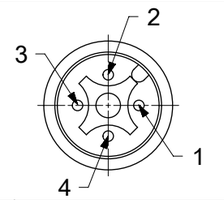	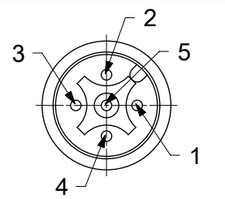

CONNECTIONS	PIN	WIRE	PIN	WIRE	PIN	WIRE
	1	BROWN	1	BROWN	1	BROWN
	3	BLUE	2	WHITE	2	WHITE
	4	BLACK	3	BLUE	3	BLUE
			4	BLACK	4	BLACK
					5	GREY

CODING M8 ACCORDING TO IEC 61076-2-104
CODING M12 ACCORDING TO IEC IEC 61076-2-101

NOTES:
RATED VOLTAGE: 3 contacts 60V AC/DC
4 and 5 contacts 30V AC/DC
CURRENT RATING: 3, 4, 5 contacts 3A
PROTECTION CLASS: IP 67
TEMPERATURE: -25°C / +80°C
INSULATION RESISTANCE: 10^8 Ω MIN.
MATING CYCLES: MIN. 100
PACKAGING ACCORDING TO PACKAGING SPEC. 1201202000

FOR OPTIONS SEE - NUMERICAL CODE - ON SHEET 2

ITEM	QTY.	DESCRIPTION	MATERIAL	FINISH/COLOR
1	3 / 4 / 5	CONTACT M8 FEMALE	BRONZE	SELECTIVE Au OVER Ni
2	1	O-RING	FKM	RED
3	1	INSERT FEMALE M8	TPU	BLACK
4	1	COUPLING NUT M8 FEMALE SW9	BRASS	SEE MATRIX
5	-	OVERMOULDING	TPU	SEE MATRIX
6	-	CABLE	SEE SHEET 2	---
7	1	LABEL	VINYL	YELLOW
8	1	COUPLING NUT M12 MALE SW13	BRASS	SEE MATRIX
9	1	INSERT MALE M12	TPU	BLACK
10	3 / 4 / 5	CONTACT M8 MALE	BRONZE	SELECTIVE Au OVER Ni
11	0 / 2	ID CARRIER (SEE MATRIX)	PVC	TRANSPARENT

THIS DRAWING CONTAINS INFORMATION THAT IS PROPRIETARY TO MOLEX ELECTRONIC TECHNOLOGIES, LLC AND SHOULD NOT BE USED WITHOUT WRITTEN PERMISSION

FUNCTIONAL SYMBOLS: FA = 0, FC = 0, FD = 0
DIVISIONAL SYMBOLS

DIMENSION UNITS	SCALE
mm	2:1

GENERAL TOLERANCES (UNLESS SPECIFIED)

ANGULAR TOL	± 1.0 °
4 PLACES	±
3 PLACES	±
2 PLACES	± 0.05
1 PLACE	± 0.3
0 PLACES	± 0.5

DRAFT WHERE APPLICABLE MUST REMAIN WITHIN DIMENSIONS

CURRENT REV DESC: AS PER THE PCN-513749 CHANGED DIMENSIONING STYLE OF OVERALL LENGTH TO "END TO END". ADDED NOTES ON PACKAGING SPEC , INSULATION RESISTANCE & MATING CYCLES. SORTED PART LIST USING CABLE TYPES ON SHEET 3,

EC NO: 789428
DRWN: AKABADI 2023/09/29
CHK'D: RSILLER 2024/07/02
APPR: RSILLER 2024/07/02

INITIAL REVISION:
DRWN: JMARSZALEK 2016/09/14
APPR: MIWASIECZKO 2017/11/28

molex

CSE M8 M12 XP ACBC FE STR WSOR MA STR XM

PRODUCT CUSTOMER DRAWING

DOCUMENT NUMBER	DOC TYPE	DOC PART	REVISION
1200878806	PSD	000	B

THIRD ANGLE PROJECTION	DRAWING	SERIES	MATERIAL NUMBER	CUSTOMER	SHEET NUMBER
	A3-SIZE	120087	SEE PART LIST	GENERAL MARKET	1 OF 3

DOCUMENT STATUS	P1	RELEASE DATE	2024/07/02 09:16:47

FORMAT: master_sheet-A3
REVISION: J1
DATE: 2021/05/05

ENGINEERING NO. - NUMERICAL CODE (Available parts see PART LIST table. Other parts available upon request).

OPTIONS

4	8	X	0	3	0	B	X	X	X	X	X	X	X

- 48=Nano-Change M8x1 to Micro-Change M12x1
- Poles: 3=3 Poles, 4=4 Poles, 5=5 Poles
- Heads style: 030=Plug Female Straight to Plug Male Straight
- Cable type: See Table
- Units: M=Meter
- Length Examples: 005=0.5 units, 010=1 units, 100=10 units
- Overmold color: Blank (Standard)=Black, Y = YELLOW
- Coupling Nut: Blank (Standard)= Knurled/Hex Brass, Ni Plated; 7= Knurled Brass Ni plated, Teflon Coated
- H= 2 pcs. of I/D Carrier PVC Transparent (Cables B36 always with 2 pcs, I/D Carrier)

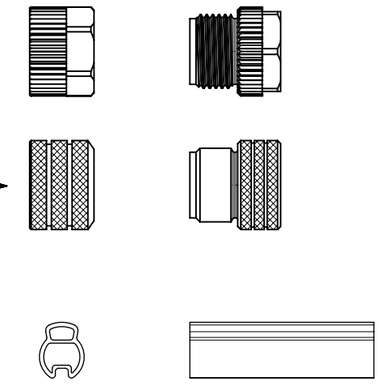

CABLE INFORMATION (for more information see Cable Data Sheet).

CABLE TYPE	NO. OF WIRES	CROSS SECTION	CABLE JACKET	UL	CSA	STATIC: TEMP. / BENDING RADIUS	DYNAMIC: TEMP. / BENDING RADIUS	DRAG CHAIN: TEMP. / BENDING RADIUS	DRAG CHAIN	CABLE PRODUCT SPECIFICATION	CABLE SPEC. DRAWING
B41	3 / 4 / 5	0.25mm²	TPU Black	UL 21215/758	C22.2 I/II A/B 80°/600V	-40°C to +90°C >5xO.D.	-25°C to +80°C >7.5xO.D.	-5°C to +60°C >7.5xO.D.	up to 5 000 000 cycles at temp 20°C	1552200001	SD-120209-006
B55	3 / 4	0.34mm²	TPU Yellow								n/a
B36	3/4	0.34mm²	TPU Orange								SD-120209-001

CABLE LENGTH TOLERANCES

LENGTH	TOLERANCE
0m-1m	+40 mm
>1m-5m	+60 mm
>5m-10m	+80 mm
>10m-20m	+140 mm
>20m-30m	+160 mm
>30m	+1% length

THIS DRAWING CONTAINS INFORMATION THAT IS PROPRIETARY TO MOLEX ELECTRONIC TECHNOLOGIES, LLC AND SHOULD NOT BE USED WITHOUT WRITTEN PERMISSION

FUNCTIONAL SYMBOLS: FA = 0, FC = 0, FP = 0

DIVISIONAL SYMBOLS

DIMENSION UNITS	SCALE
mm	2:1

GENERAL TOLERANCES (UNLESS SPECIFIED)

ANGULAR TOL	±	1.0 °
4 PLACES	±	
3 PLACES	±	
2 PLACES	±	0.05
1 PLACE	±	0.3
0 PLACES	±	0.5

DRAFT WHERE APPLICABLE MUST REMAIN WITHIN DIMENSIONS

CURRENT REV DESC: AS PER THE PCN-513749 CHANGED DIMENSIONING STYLE OF OVERALL LENGTH TO "END TO END". ADDED NOTES ON PACKAGING SPEC , INSULATION RESISTANCE & MATING CYCLES. SORTED PART LIST USING CABLE TYPES ON SHEET 3,

EC NO: 789428
DRWN: AKABADI 2023/09/29
CHK'D: RSILLER 2024/07/02
APPR: RSILLER 2024/07/02

INITIAL REVISION:
DRWN: JMARSZALEK 2016/09/14
APPR: MIWASIECZKO 2017/11/28

THIRD ANGLE PROJECTION | DRAWING: A3-SIZE | SERIES: 120087

molex

CSE M8 M12 XP ACBC FE STR WSOR MA STR XM

PRODUCT CUSTOMER DRAWING

DOCUMENT NUMBER	DOC TYPE	DOC PART	REVISION
1200878806	PSD	000	B

MATERIAL NUMBER	CUSTOMER	SHEET NUMBER
SEE PART LIST	GENERAL MARKET	2 OF 3

DOCUMENT STATUS	P1	RELEASE DATE	2024/07/02 09:16:47

FORMAT: master_tb_mod-A3
REVISION: J1
DATE: 2021/05/01

PART LIST

MOLEX PN	ENGINEERING No	L [mm]
3P CABLE B36		
1200878959	483030B36M0037Y	300
4P CABLE B36		
1200878960	484030B36M0037Y	300
3P CABLE B41		
1200878805	483030B41M006	600
1200878938	483030B41M006H	600
1200878806	483030B41M010	1000
1200878939	483030B41M010H	1000
1200878807	483030B41M020	2000
1200878940	483030B41M020H	2000
1200878784	483030B41M030	3000
1200878929	483030B41M030H	3000
1200878785	483030B41M050	5000
1200878930	483030B41M050H	5000
1200878786	483030B41M100	10000
1200878931	483030B41M100H	10000
1200878958	483030B41M150	15000
4P CABLE B41		
1200878793	484030B41M006	600
1200878932	484030B41M006H	600
1200878794	484030B41M010	1000
1200878933	484030B41M010H	1000
1200878795	484030B41M020	2000
1200878934	484030B41M020H	2000
1200878796	484030B41M030	3000
1200878935	484030B41M030H	3000
1200878926	484030B41M040	4000
1200878797	484030B41M050	5000
1200878936	484030B41M050H	5000
1200878798	484030B41M100	10000
1200878937	484030B41M100H	10000
5P CABLE B41		
1200878966	485030B41M005	500
1200878967	485030B41M010	1000
1200878968	485030B41M015	1500
1200878969	485030B41M020	2000
1200878970	485030B41M025	2500

MOLEX PN	ENGINEERING No	L [mm]
3P CABLE B55		
1200878922	483030B55M050	5000

THIS DRAWING CONTAINS INFORMATION THAT IS PROPRIETARY TO MOLEX ELECTRONIC TECHNOLOGIES, LLC AND SHOULD NOT BE USED WITHOUT WRITTEN PERMISSION

FUNCTIONAL SYMBOLS: FA = 0, FC = 0, FP = 0

DIVISIONAL SYMBOLS

DIMENSION UNITS	SCALE
mm	2:1

GENERAL TOLERANCES (UNLESS SPECIFIED)

ANGULAR TOL	±	1.0 °
4 PLACES	±	
3 PLACES	±	
2 PLACES	±	0.05
1 PLACE	±	0.3
0 PLACES	±	0.5

DRAFT WHERE APPLICABLE MUST REMAIN WITHIN DIMENSIONS

CURRENT REV DESC: AS PER THE PCN-513749 CHANGED DIMENSIONING STYLE OF OVERALL LENGTH TO "END TO END". ADDED NOTES ON PACKAGING SPEC , INSULATION RESISTANCE & MATING CYCLES. SORTED PART LIST USING CABLE TYPES ON SHEET 3,

EC NO: 789428
DRWN: AKABADI 2023/09/29
CHK'D: RSILLER 2024/07/02
APPR: RSILLER 2024/07/02

INITIAL REVISION:
DRWN: JMARSZALEK 2016/09/14
APPR: MIWASIECZKO 2017/11/28

THIRD ANGLE PROJECTION

DRAWING	SERIES
A3-SIZE	120087

molex

CSE M8 M12 XP ACBC FE STR WSOR MA STR XM

PRODUCT CUSTOMER DRAWING

DOCUMENT NUMBER	DOC TYPE	DOC PART	REVISION
1200878806	PSD	000	B

MATERIAL NUMBER	CUSTOMER	SHEET NUMBER
SEE PART LIST	GENERAL MARKET	3 OF 3

DOCUMENT STATUS	P1	RELEASE DATE	2024/07/02 09:16:47

FORMAT: master_tb_mod-A3
REVISION: J1
DATE: 2021/05/01