PART No MATRIX:

OPTIONS

4	0	3	0	P	1	X	X	X	M	X	X	X	X

- 40=M8x1 Single ended
- Poles: 3 = 3 Poles
- Heads style: 0P1 = Plug Female 90° Angel PNP LED
- Cable: SEE TABLE 1
- Units: M=Meter
- Length Examples: 005 = 0.5 m, 010 = 1 m, 020 = 2 m, 050 = 5 m, 100 = 10 m, 150 = 15 m, 200 = 20 m
- Overmold color: Blank (Standard)=Clear, Y= Yellow
- Coupling Nut: Blank (Standard)= Brass, 7=Brass Teflon Coated
- H= 2 pcs. of I/D Carrier PVC Transparent (Cables Ixx & P82 always with 2 pcs. I/D Carrier)

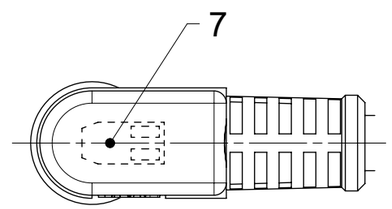

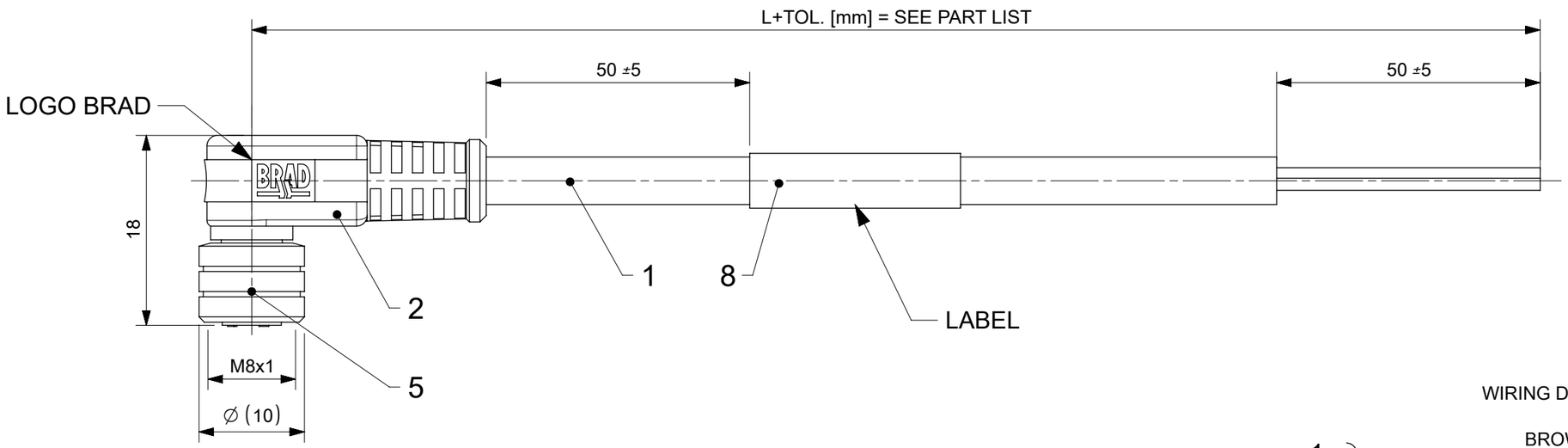

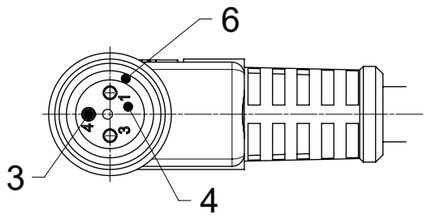

VIEW FROM THE FRONT SIDE

WIRING DIAGRAM



PNP WIRING

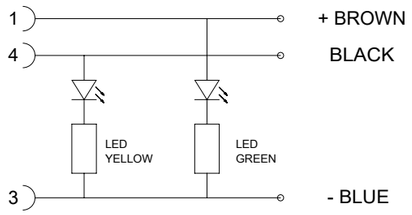

TECHNICAL SPEC:
CONTACT CURRENT RATING: 3A
VOLTAGE RATING: 60V
PACKAGING ACCORDING TO PACKAGING SPEC: 1201202000

DOCUMENT STATUS	P1	RELEASE DATE	2025/10/16 19:08:56

THIS DRAWING CONTAINS INFORMATION THAT IS PROPRIETARY TO MOLEX ELECTRONIC TECHNOLOGIES, LLC AND SHOULD NOT BE USED WITHOUT WRITTEN PERMISSION

DIMENSION UNITS	SCALE
mm	2:1

GENERAL TOLERANCES (UNLESS SPECIFIED)

ANGULAR TOL	±	1.0 °
4 PLACES	±	
3 PLACES	±	
2 PLACES	±	0.05
1 PLACE	±	0.3
0 PLACES	±	0.5

DRAFT WHERE APPLICABLE MUST REMAIN WITHIN DIMENSIONS

CURRENT REV DESC: REMOVED OBSOLETED PART NUMBERS AS PER PCN#517104

EC NO: 836952

DRWN:	SAMPRS	2025/10/10
CHK'D:	GGA	2025/10/16
APPR:	GGA	2025/10/16

INITIAL REVISION:

DRWN:	MCELEJEWSKI	2018/10/12
APPR:	MIWASIECZKO	2018/10/15

THIRD ANGLE PROJECTION

DRAWING	SERIES
A3-SIZE	120086

molex

NC-3P-FE-LED.PNP-90
-XXM-PVC-NUT

PRODUCT CUSTOMER DRAWING

DOCUMENT NUMBER	DOC TYPE	DOC PART	REVISION
1200868338	PSD	001	A2

MATERIAL NUMBER	CUSTOMER	SHEET NUMBER
SEE PART LIST	GENERAL MARKET	1 OF 2

FORMAT: master-lb-prod-A3
REVISION: J1
DATE: 2021/05/01

PART LIST

MOLEX PN	ENGINEERING NO	L+TOL. [mm]
1200270115	4030P1E02M020	2000+89
1200270117	4030P1E02M050	5000+165
1200270119	4030P1I02M020	2000+89
1200270121	4030P1I02M050	5000+165
1200270949	4030P1P02M100	10000+317
1200860464	4030P1P03M050	5000+165
1200865590	4030P1E02M010	1000+56
1200868024	4030P1E02M100	10000+317
1200868051	4030P1H08M050	5000+165
1200868104	4030P1P03M150	15000+610
1200868219	4030P1H08M020	2000+89
1200868334	4030P1E02M002	200+19
1200868335	4030P1I02M030	3000+89
1200868336	4030P1I02M100	10000+317
1200868337	4030P1P02M020	2000+89
1200868338	4030P1P02M030	3000+89
1200868411	4030P1E02M050H	5000+165

TABELA 1/ *TABLE 1*

CABLE TYPE	CROSS SCETION	MATERIAL	COLOR	OUTER DIAMETER
E02	3x0.25mm2	PVC	BLACK	4.6mm
H08	3x0.25mm2	PUR	BLACK	4.1mm
I02	3x0.25mm2	PVC	GRAY	4.5mm
P02	3x0.25mm2	PVC/PUR	BLACK	4.7mm
P03	3x0.34mm2	PUR	BLACK	5.3mm
P82	3x0.34mm2	PUR	ORANGE	5.1mm

BILL OF MATERIAL

ITEM	QTY	DESCRIPTION	MATERIAL	FINISH/COLOR
8	1	LABEL 2.0X1.75	VINYL	YELLOW
7	1	NANO LED PNP PCB	-	-
6	1	GASKET 5.0X0.8	FKM	RED
5	1	M8 FEMALE COUPLING NUT	BRASS	Ni-PLATED
4	1	INSERT M8 3P FEMALE	PUR	BLACK
3	3	CONTACT 10 FEMALE	Cu/Ni2-4	GOLD-PLATED
2	-	MOULDING MATERIAL	TPU	SEE MATRIX
1	-	CABLE 3X0.25	SEE TABLE 1	SEE TABLE 1

Table of length tolerances [mm]

Over	Up to and including	Tolerance
0	305	+19
305	915	+45
915	1830	+56
1830	3660	+89
3660	7320	+165
7320	14640	+317
14640	30500	+610
30500	>	+2% of length

DOCUMENT STATUS	P1	RELEASE DATE	2025/10/16 19:08:56

THIS DRAWING CONTAINS INFORMATION THAT IS PROPRIETARY TO MOLEX ELECTRONIC TECHNOLOGIES, LLC AND SHOULD NOT BE USED WITHOUT WRITTEN PERMISSION

DIMENSION UNITS: mm | SCALE: 1:1

GENERAL TOLERANCES (UNLESS SPECIFIED)

ANGULAR TOL	±	1.0 °
4 PLACES	±	
3 PLACES	±	
2 PLACES	±	0.05
1 PLACE	±	0.3
0 PLACES	±	0.5

DRAFT WHERE APPLICABLE MUST REMAIN WITHIN DIMENSIONS

CURRENT REV DESC: REMOVED OBSOLETED PART NUMBERS AS PER PCN#517104

EC NO: 836952

DRWN:	SAMPRS	2025/10/10
CHK'D:	GGA	2025/10/16
APPR:	GGA	2025/10/16

INITIAL REVISION:

DRWN:	MCELEJEWSKI	2018/10/12
APPR:	MIWASIECZKO	2018/10/15

molex

NC-3P-FE-LED.PNP-90
-XXM-PVC-NUT

PRODUCT CUSTOMER DRAWING

THIRD ANGLE PROJECTION	DRAWING	SERIES	MATERIAL NUMBER	CUSTOMER	SHEET NUMBER
	A4-SIZE	120086	SEE PART LIST	GENERAL MARKET	2 OF 2

DOCUMENT NUMBER	DOC TYPE	DOC PART	REVISION
1200868338	PSD	001	A2

FORMAT: master-tb-prod-A4
REVISION: J1
DATE: 2021/05/01

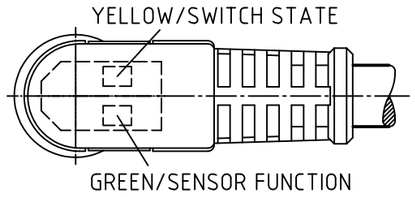

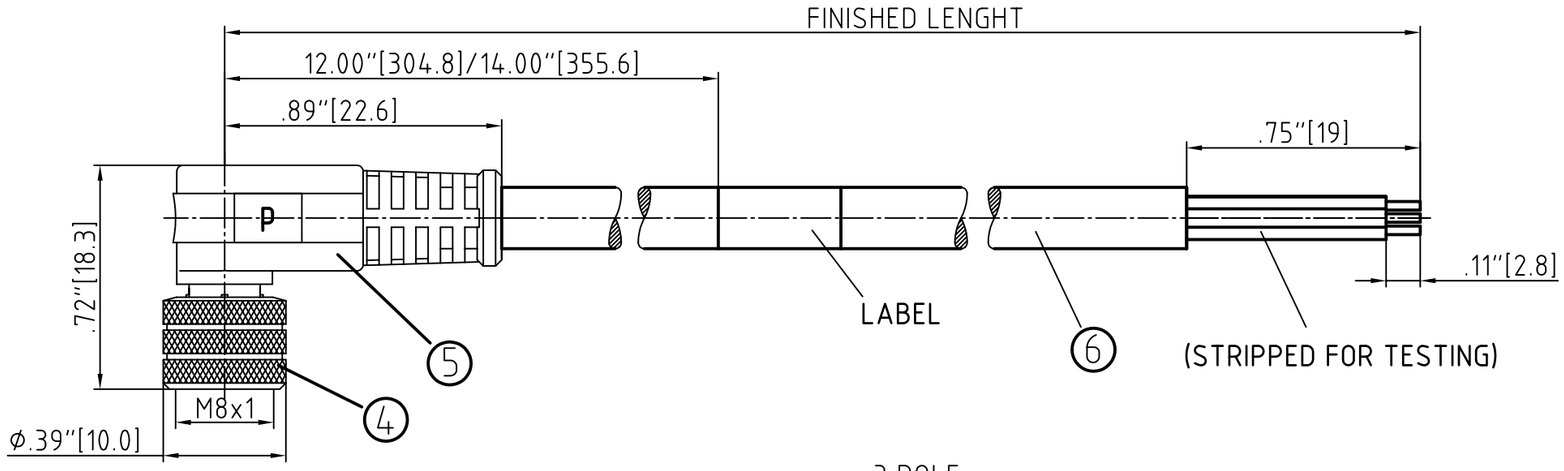

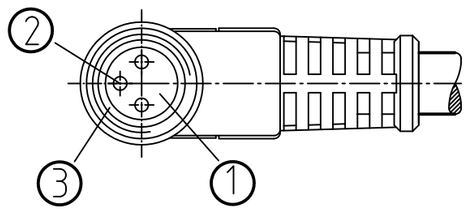

FEMALE FACE VIEW

3-POLE

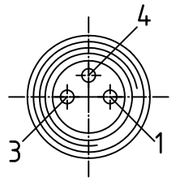

1 BROWN
3 BLUE
4 BLACK

3 POLE

PNP-NORMALLY OPEN=YELLOW-GREEN

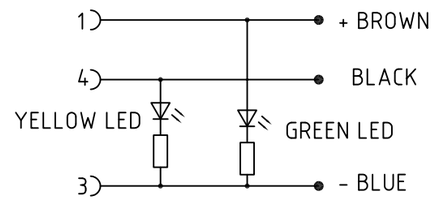

POLE	MATERIAL NUMBER	ENGINEERING NUMBER	FINISHED LENGHT IN/MM
3	1200270946	4030P1P03M020	6.56' +3.50" -0 [2.0M +88.9 -0]
3	1200860464	4030P1P03M050	16.40' +6.50" -0 [5.0M +165.1 -0]
3	1200270949	4030P1P03M100	32.81' +12.50" -0 [10.0M +317.5 -0]

CONNECTOR SPECIFICATION:

VOLTAGE RATING	3-4POL:10-30V/DC
AMPERAGE RATING	3 AMPS
PROTECTION	IP68
OPERATING TEMPERATURE	-30°C TO +80°C (STATIC)
UL CERTIFICATIONS	UL listed, File #E152210
CSA CERTIFICATIONS	CSA CERTIFIED, File LR6837

ITEM	COMPONENT	MATERIAL	FINISH
1	INSERT	POLYURETHANE (PUR)	BLACK
2	CONTACT SOCKET	COPPER ALLOY	GOLD OVER NICKEL
3	O-RING	VITON	
4	COUPLING NUT	BRASS	NICKEL PLATED
5	OVERMOLD	TPU	CLEAR
6	CABLE0.25mm²(24AWG) (COPPER STRANDING) 3 CONDUCT. 300V	JACKET: PUR	BLACK

DESCRIPTION
EC NO: WEU2010-0303 2010/01/26
DRWN: REISSNER 2010/01/26
CH'KD: FP ----
APPR: NSTAUDIG 2010/02/01
DESCRIPTION
1
REV

QUALITY SYMBOLS
▼ = 0
Ⓒ = 0

GENERAL TOLERANCES (UNLESS SPECIFIED)

	mm	INCH
4 PLACES	±---	±---
3 PLACES	±---	±---
2 PLACES	±---	±.01
1 PLACE	±0.3	±---
ANGULAR ±	--- °	

DRAFT WHERE APPLICABLE MUST REMAIN WITHIN DIMENSIONS

DIMENSION STYLE: IM/MM
SCALE: 2:1
DESIGN UNITS: METRIC
THIRD ANGLE PROJECTION

DRAWN BY: REISSNER DATE: 2010/01/26
CHECKED BY: FP DATE: 2010/01/26
APPROVED BY: NSTAUDIG DATE: 2010/02/01

NC 3P FE 90 LED
24AWG PUR

MOLEX INCORPORATED

MATERIAL NO.: SEE TABLE
DOCUMENT NO.: SD-120086-022
SHEET NO.: 1

SIZE: A3

THIS DRAWING CONTAINS INFORMATION THAT IS PROPRIETARY TO MOLEX INCORPORATED AND SHOULD NOT BE USED WITHOUT WRITTEN PERMISSION