M8 FEMALE
VIEWS FROM THE FRONT SIDE

3 POLE

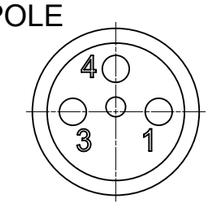

Pin	Wire color
1	BROWN
3	BLUE
4	BLACK

4 POLE

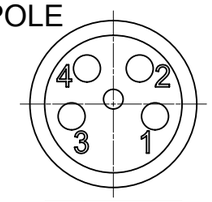

Pin	Wire color
1	BROWN
2	WHITE
3	BLUE
4	BLACK

5 POLE

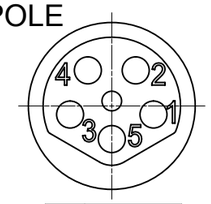

Pin	Wire color
1	BROWN
2	WHITE
3	BLUE
4	BLACK
5	GREY

PART NO. MATRIX

OPTIONS

4	0	X	0	0	1	B	X	X	M	X	X	X	X

- 40 = M8x1 SINGLE ENDED
- POLES: 3 = 3 POLES; 4 = 4 POLES; 5 = 5 POLES
- HEADER: 001 = FEMALE 90°
- CABLE: B41 = 0,25mm², TPU BK; B36 = 0,34mm², TPU OG
- UNIT: M = METER
- LENGTH EXAMPLE: 010 = 1 m; 050 = 5 m; 100 = 10 m
- COUPLING NUT: BLANK = KNU; 7 = TEFLON KNU; OVERMOULD: BLANK = BK; A = GY; Y = YE; R = RD; H = 2x I/D CARIERR AND ALWAYS WITH THE CABLE B3

FEMALE RIGHT ANGLED PLUG(M8 PLUG)

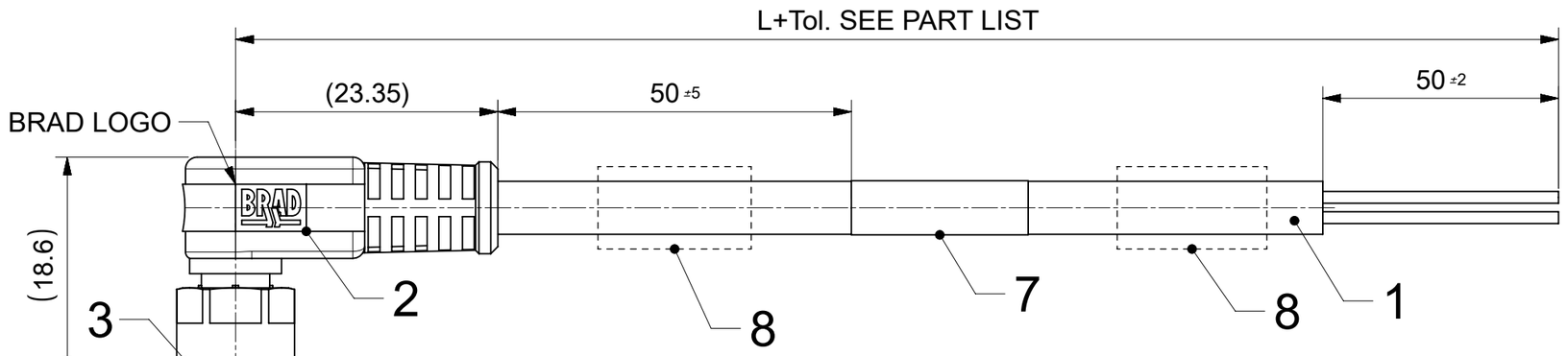

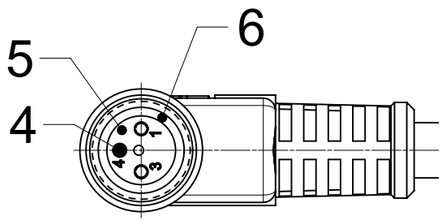

VIEW FROM THE FRONT SIDE
3P

BOM

ITEM	QTY.	DESCRIPTION	MATERIAL	FINISH / COLOR
1	-	CABLE	TPU	SEE CABLE LIST
2	-	MOULDING MATERIAL	TPU	SEE PART MATRIX
3	1	M8 COUPLING NUT	SEE PART MATRIX	
4	3/4/5	CONTACT FE	BRONZE	SELECTED GOLD OVER NICKEL
5	1	INSERT M8 FE XP	PUR	BLACK
6	1	GASKET	FKM	RED
7	1	WRAP LABEL	VINYL	YELLOW
8	(SEE MATRIX)	ID-CARRIER	PVC	TRANSPARENT

TECHNICAL DATA :	
TEMPERATURE RANGE	-25°C TO +80°C
CONTACT CURRENT RATING	3A
VOLTAGE RATING	3 POLES 60V
	4-5 POLES 30V
PROTECTION CLASS	IP 67
INSULATION RESISTANCE	$10^8\Omega$ MIN
MATING CYCLES	MIN. 100

THIS DRAWING CONTAINS INFORMATION THAT IS PROPRIETARY TO MOLEX ELECTRONIC TECHNOLOGIES, LLC AND SHOULD NOT BE USED WITHOUT WRITTEN PERMISSION

FUNCTIONAL SYMBOLS: FA = 0; FC = 0; FP = 0
DIVISIONAL SYMBOLS

DIMENSION UNITS: mm
SCALE: 2:1
GENERAL TOLERANCES (UNLESS SPECIFIED)
ANGULAR TOL ± 1.0°
4 PLACES ±
3 PLACES ±
2 PLACES ±
1 PLACE ±
0 PLACES ±
DRAFT WHERE APPLICABLE MUST REMAIN WITHIN DIMENSIONS

CURRENT REV DESC: AS PER THE PCN-513749 CHANGED DIMENSIONING STYLE OF OVERALL LENGTH TO "END TO END". ADDED NOTES ON MATING CYCLES & INSULATION RESISTANCE. SORTED PART LIST USING CABLE TYPES ON SHEET 2

EC NO: 789428
DRWN: AKABADI 2023/08/18
CHK'D: RSILLER 2024/07/02
APPR: RSILLER 2024/07/02
INITIAL REVISION:
DRWN: WSTRASZKIEWI 2014/09/02
APPR: MIWASIECZKO 2014/09/08

THIRD ANGLE PROJECTION | DRAWING: A3-SIZE | SERIES: 120086

molex

CSE M8 XP AC FE RA
TPU XM

PRODUCT CUSTOMER DRAWING

DOCUMENT NUMBER	DOC TYPE	DOC PART	REVISION
SD-120086-010	PSD	001	C

MATERIAL NUMBER	CUSTOMER	SHEET NUMBER
SEE PART LIST	GENERAL MARKET	1 OF 2

DOCUMENT STATUS	P1	RELEASE DATE	2024/07/02 09:17:48

FORMAT: master_tb_mod-A3
REVISION: J1
DATE: 2021/05/01

CABLE INFORMATION

CABLE TYPE	NO. OF WIRES	CROSS SECTION	CABLE JACKET	UL	CSA	STATIC:TEMP. / BENDING RADIUS	DYNAMIC: TEMP. / BENDING RADIUS	DRAG CHAIN: TEMP. / BENDING RADIUS	DRAG CHAIN	CABLE SPEC. DRAWING	OTHER INFORMATION
B41	3/4/5	0.25mm²	TPU BLACK	UL 21215	C22.2 I/II A/B 80°/600V	-40°C to +90°C 5xO.D.	-25°C to +80°C 7.5xO.D.	-5°C to +60°C 7.5xO.D.	up to 5 mio cycles at temp 20°C	SD-120209-006	WSOR
B36	3/4	0.34mm²	TPU ORANGE							SD-120209-001	

PART LIST

MOLEX PN	ENGINEERING No	L [mm]
3P CABLE B36		
1200868925	403001B36M0107Y	1000
1200868883	403001B36M0507Y	5000
4P CABLE B36		
1200868888	404001B36M0507Y	5000
3P CABLE B41		
1200868940	403001B41M005	500
1200868667	403001B41M010	1000
1200868668	403001B41M020	2000
1200868669	403001B41M050	5000
1200868670	403001B41M100	10000
4P CABLE B41		
1200868948	404001B41M005	500
1200868671	404001B41M010	1000
1200868672	404001B41M020	2000
1200868949	404001B41M030	3000
1200868950	404001B41M040	4000
1200868673	404001B41M050	5000
1200868951	404001B41M080	8000
1200868674	404001B41M100	10000
5P CABLE B41		
1200868675	405001B41M010	1000
1200868676	405001B41M020	2000
1200868677	405001B41M050	5000
1200868678	405001B41M100	10000

CABLE LENGTH TOLERANCES

LENGTH	TOLERANCE
0m-1m	+40 mm
>1m-5m	+60 mm
>5m-10m	+80 mm
>10m-20m	+140 mm
>20m-30m	+160 mm
>30m	+1% length

THIS DRAWING CONTAINS INFORMATION THAT IS PROPRIETARY TO MOLEX ELECTRONIC TECHNOLOGIES, LLC AND SHOULD NOT BE USED WITHOUT WRITTEN PERMISSION

FUNCTIONAL SYMBOLS: FA = 0, FC = 0, FP = 0

DIVISIONAL SYMBOLS

DIMENSION UNITS: mm | SCALE: 1:1

GENERAL TOLERANCES (UNLESS SPECIFIED)

ANGULAR TOL	± 1.0 °
4 PLACES	±
3 PLACES	±
2 PLACES	±
1 PLACE	±
0 PLACES	±

DRAFT WHERE APPLICABLE MUST REMAIN WITHIN DIMENSIONS

CURRENT REV DESC: AS PER THE PCN-513749 CHANGED DIMENSIONING STYLE OF OVERALL LENGTH TO "END TO END". ADDED NOTES ON MATING CYCLES & INSULATION RESISTANCE. SORTED PART LIST USING CABLE TYPES ON SHEET 2

EC NO: 789428
DRWN: AKABADI 2023/08/18
CHK'D: RSILLER 2024/07/02
APPR: RSILLER 2024/07/02

INITIAL REVISION:
DRWN: WSTRASZKIEWI 2014/09/02
APPR: MIWASIECZKO 2014/09/08

THIRD ANGLE PROJECTION | DRAWING: A3-SIZE | SERIES: 120086

molex

CSE M8 XP AC FE RA
TPU XM

PRODUCT CUSTOMER DRAWING

DOCUMENT NUMBER	DOC TYPE	DOC PART	REVISION
SD-120086-010	PSD	001	C

MATERIAL NUMBER	CUSTOMER	SHEET NUMBER
SEE PART LIST	GENERAL MARKET	2 OF 2

DOCUMENT STATUS	P1	RELEASE DATE	2024/07/02 09:17:48

FORMAT: master_format-A3
REVISION: J1
DATE: 2021/05/06