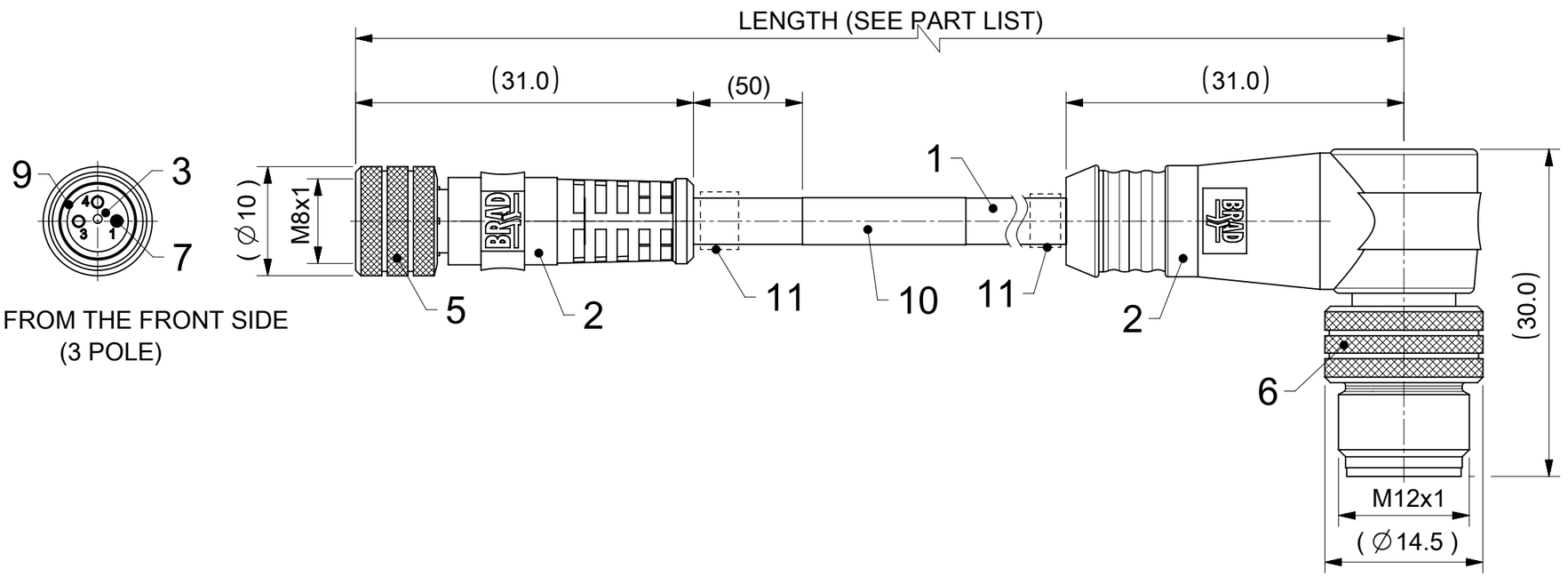

VIEW FROM THE FRONT SIDE
(3 POLE)

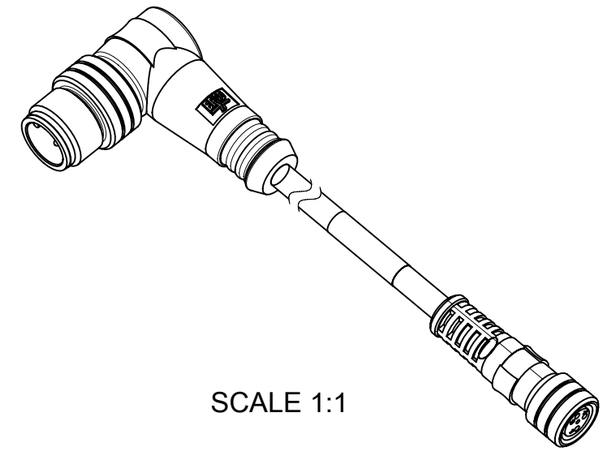

SCALE 1:1

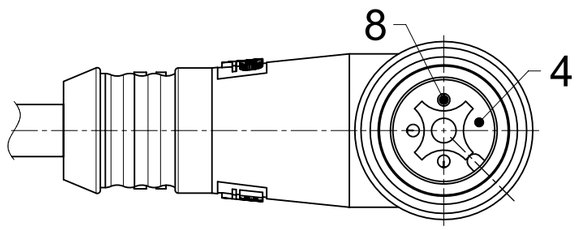

VIEW FROM THE FRONT SIDE
(3 POLE)

NOTES:
1. LABEL ON THE CABLE / FOR CABLE IXX PRINTING ON THE CABLE
2. 2 x ID CARRIER IF IN MATRIX IS "H" OR FOR CABLE IXX & P82.

CONTACTS POSITION FRONT VIEW:

	3 CONTACTS	4 CONTACTS	5 CONTACTS
M8 - FEMALE	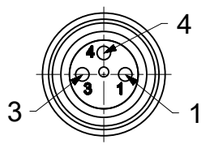	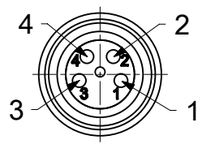	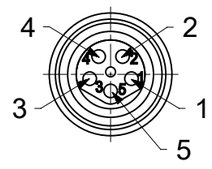
M12 - MALE	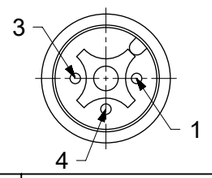	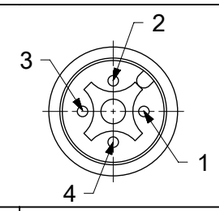	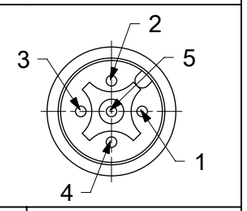

CONNECTIONS	PIN	WIRE	PIN	WIRE	PIN	WIRE
	1	BROWN	1	BROWN	1	BROWN
	3	BLUE	2	WHITE	2	WHITE
	4	BLACK	3	BLUE	3	BLUE
			4	BLACK	4	BLACK
					5	GREY

CODING M8 ACCORDING TO IEC 61076-2-104
CODING M12 ACCORDING TO IEC IEC 61076-2-101

NOTES :
ELECTRICAL DATA :
RATED VOLTAGE: 3 contacts 60V AC/DC
4 & 5 contacts 30V AC/DC
CURRENT RATING: 3, 4 & 5 contacts 3A
INSULATION RESISTANCE : $10^8\Omega$ MIN.
MATING CYCLES : MIN. 100

ENVIRONMENTAL :
PROTECTION CLASS : IP67 IN MATED
AND LOCKED POSITION
OPERATING TEMPERATURE : -25°C TO +80°C

BOM

ITEM	QTY.	DESCRIPTION	MATERIAL	FINISH
1	-	CABLE (SEE MATRIX)	-	-
2	-	MOULDING MATERIAL	TPU	BLACK
3	1	INSERT FE XP BK	PUR	BLACK
4	1	INSERT MA XP BK	PUR	BLACK
5	1	COUPLING NUT M8 FE	BRASS	Ni-PLATED /TEFLON COAT
6	1	COUPLING NUT M12 MA		
7	3/4/5	CONTACT FE	BRONZE	GOLD OVER NICKEL PLATED
8	3/4/5	CONTACT MA		
9	1	GASKET	FKM	RED
10	1	LABEL (SEE NOTE 1)	VINYL	YELLOW
11	X	ID CARRIER (SEE MATRIX)	PVC	TRANSPARENT

THIS DRAWING CONTAINS INFORMATION THAT IS PROPRIETARY TO MOLEX ELECTRONIC TECHNOLOGIES, LLC AND SHOULD NOT BE USED WITHOUT WRITTEN PERMISSION

DIMENSION UNITS	mm
SCALE	2:1
GENERAL TOLERANCES (UNLESS SPECIFIED)	
ANGULAR TOL ±	1.0 °
4 PLACES ±	
3 PLACES ±	
2 PLACES ±	0.05
1 PLACE ±	0.3
0 PLACES ±	0.5
DRAFT WHERE APPLICABLE MUST REMAIN WITHIN DIMENSIONS	

CURRENT REV DESC: REMOVED OBSOLETED PART NUMBERS AS PER PCN#517104

EC NO: 836952
DRWN: SAMPRS 2025/10/11
CHK'D: GGA 2025/10/16
APPR: GGA 2025/10/16

INITIAL REVISION:
DRWN: MDHARMANTI 2022/03/11
APPR: RSILLER 2022/03/18

THIRD ANGLE PROJECTION | DRAWING: A3-SIZE | SERIES: 120087

molex

CSE M8 FE AC STR PUR/PVC M12 MA AC RA XP DE

PRODUCT CUSTOMER DRAWING

DOCUMENT NUMBER	DOC TYPE	DOC PART	REVISION
1200878440	PSD	000	B1

MATERIAL NUMBER	CUSTOMER	SHEET NUMBER
SEE PART LIST	GENERAL MARKET	1 OF 2

DOCUMENT STATUS	P1	RELEASE DATE	2025/10/16 19:08:57

FORMAT: master-tb-prod-A3
REVISION: J1
DATE: 2021/05/01

PART NO MATRIX

4	8	*	0	3	2	*	*	*	M	*	*	*	*	*

OPTIONS

- 48 = M8x1/M12x1 DOUBLE ENDED
- POLES:
  3 = 3 POLES
  4 = 4 POLES
  5 = 5 POLES
- HEADER:
  032 = FEMALE STRAIGHT - MALE 90°
- CABLE TYPE SEE TABLE
- UNIT:
  M = METER
- LENGTH:
  EXAMPLE:
  010 = 1 m
  050 = 5 m
  100 = 10 m
- H = 2 PCS. OF I/D CARIERR
  MOLDING/OVERMOULD:
  BLANK = BLACK
  A = GREY
  G = BLACK
  Y = YELLOW
  COUPLING NUT:
  BLANK=KNU/HEX
  7=TEFLON



CABLE LIST

CABLE TYPE	NO. OF WIRES	CROSS SECTION	CABLE JACKET	UL	CSA	STATIC: TEMP. / BENDING RADIUS	DYNAMIC: TEMP. / BENDING RADIUS	DRAG CHAIN	SHIELD
E02	3 / 4 / 5 / 8	0.25mm²	PVC BLACK	UL 2464/1729	C22.2 I/II A/B 80°C/300V	-30°C to +80°C, 10xO.D.	-10°C to +80°C, 15xO.D.	-	-
H09	3 / 4 / 5	0.34mm²	PUR BLACK LS0H	UL 21198/10493	C22.2 I/II A/B 80°C/300V	-40°C to +80°C, 5xO.D.	-25°C to +80°C, 10xO.D.	2 000 000 cycles at 20°C, Temp. range +5°C to +60°C	-
P02	3 / 4 / 5 / 8	0.25mm²	PUR / PVC BLACK	-	-	-30°C to +80°C, 7xO.D.	-5°C to +80°C, 15xO.D.	-	-
P82	3 / 4 / 5	0.34mm²	PUR IRR ORANGE	-	-	-50°C to +105°C, >5xO.D.	-40°C to +105°C, >7.5xO.D.	-	-
I02	3 / 4 / 8	0.25mm²	PVC CEI GREY	-	-	-30°C to +70°C	-5°C to +70°C	-	-
B41	3	0.25mm²	TPU BLACK	UL STYLE 21215	CSA RATING 80°C 600V	-40°C to +90°C, 5xO.D.	-25°C to +80°C, >7.5xO.D.	-	-

PART LIST

MOLEX P/N	ENGINEERING No.	L [mm]
3P CABLE E02		
1200878439	483032E02M006	600
1200878440	483032E02M010	1000
1200878641	483032E02M015	1500
1200878581	483032E02M030	3000
1200878441	483032E02M050	5000
1200878442	483032E02M100	10000
1200878443	483032E02M150	15000
4P CABLE E02		
1200878489	484032E02M003	300
1200878252	484032E02M050	5000
1200878490	484032E02M006	600
1200878491	484032E02M010	1000
1200878253	484032E02M100	10000
3P CABLE I02		
1200878444	483032I02M010	1000
1200878831	483032I02M030Y	3000
1200878445	483032I02M050	5000
1200878832	483032I02M050Y	5000
1200878833	483032I02M100Y	10000

MOLEX P/N	ENGINEERING No.	L [mm]
3P CABLE P02		
1200878446	483032P02M006	600
1200878447	483032P02M010	1000
1200878919	483032P02M015	1500
1200878448	483032P02M020	2000
1200878449	483032P02M030	3000
1200878450	483032P02M050	5000
4P CABLE P02		
1200878492	484032P02M020	2000

MOLEX P/N	ENGINEERING No.	L [mm]
4P CABLE B41		
1200879048	484032B41M050	5000
1200879051	484032B41M100	10000
4P CABLE H09		
1200878631	484032H09M030	3000

CABLE LENGTH TOLERANCES

LENGTH	TOLERANCE
0m-1m	+40 mm
>1m-5m	+60 mm
>5m-10m	+80 mm
>10m-20m	+140 mm
>20m-30m	+160 mm
>30m	+1% length

THIS DRAWING CONTAINS INFORMATION THAT IS PROPRIETARY TO MOLEX ELECTRONIC TECHNOLOGIES, LLC AND SHOULD NOT BE USED WITHOUT WRITTEN PERMISSION

DIMENSION UNITS	SCALE
mm	1:1

GENERAL TOLERANCES (UNLESS SPECIFIED)

ANGULAR TOL	± 1.0 °
4 PLACES	±
3 PLACES	±
2 PLACES	± 0.05
1 PLACE	± 0.3
0 PLACES	± 0.5

DRAFT WHERE APPLICABLE MUST REMAIN WITHIN DIMENSIONS

CURRENT REV DESC: REMOVED OBSOLETED PART NUMBERS AS PER PCN#517104

EC NO: 836952
DRWN: SAMPRS 2025/10/11
CHK'D: GGA 2025/10/16
APPR: GGA 2025/10/16

INITIAL REVISION:
DRWN: MDHARMANTI 2022/03/11
APPR: RSILLER 2022/03/18

THIRD ANGLE PROJECTION | DRAWING: A3-SIZE | SERIES: 120087

molex

CSE M8 FE AC STR PUR/PVC M12 MA AC RA XP DE

PRODUCT CUSTOMER DRAWING

DOCUMENT NUMBER	DOC TYPE	DOC PART	REVISION
1200878440	PSD	000	B1

MATERIAL NUMBER	CUSTOMER	SHEET NUMBER
SEE PART LIST	GENERAL MARKET	2 OF 2

DOCUMENT STATUS	P1	RELEASE DATE	2025/10/16 19:08:57

FORMAT: master-lb-prod-A3
REVISION: J1
DATE: 2021/05/01