No.：HoS20260624-89
Version：A0

Product Acknowledgement Letter

CustomerName：

ProductName: Sealed-body alloy resistor

ProductSpecification: HoYLR2512-2W-4mR-1%

ProductCode:

Dateofdocument: 2026-06-24

Approved Company Signature			
Edited by	Reviewed by	Approved by	CompanySeal
ZhenhuanLiao	YongkangHuang	WenyiLeng	

Shenzhen Milliohm Electronic Ltd
Engineering stamp

Customer confirmation seal			
Acknowledged by	Reviewed by	Approved by	Company Seal

Milliohm Electronic

Purpose

This acknowledgment document describes the sample characteristics and inspection standards to facilitate better communication with customers, reach mutualagreement, and prevent product quality disputes arising from insufficient communication.

Scope of Application

This Certificate of Acceptance applies to the samples provided by Shenzhen Milliohm Electronic Co.,Ltd and covers the product characteristics and inspectionstandards .

Order Association

By acknowledging this confirmation, the customer certifies that the specifications and models of materials under all contract orders with Shenzhen Milliohm Electronic Co.,Ltd are consistent with the delivered products. If no objection or confirmationis received, this confirmation shallbe deemed effective two weeks after the date of receipt by the customer.

Product Features

1.Sulfur resistance
2.Metallized material
3.Ultra-long-term stability
4.Halogen-free and lead-free, compliant with ROHS
5. Stable material
6. High rated power
7. Ultra-low temperature coefficient
8. Exceptional reliability

Product Application Scope

1.Digital Products
2. Chargers
3.Smart Home Devices
4.Consumer Electronics
5.Current Sensing and Voltage Dividing
6.Power Adapters
7.Power Tools, Lithium BatteryProtection
8. Major Appliances, Cleaning Appliances

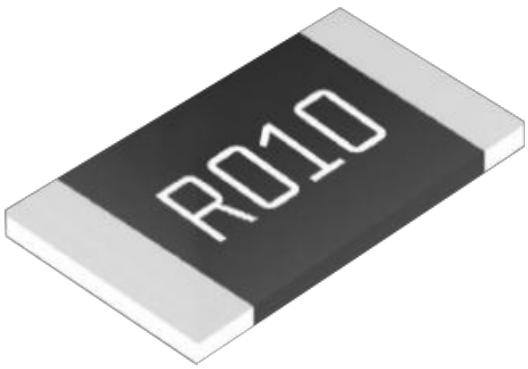

High-tech enterprises IATF16949 ISO9001 RoHS REACH

Selection Example：HoYLR2512-2W-4mR-1%	Sealed-bodyalloyresistor

Ho	YLR	2512	2W	4mR	1%
↓	↓	↓	↓	↓	↓
Manufacturer	Product Series	Package	Power Rating	Resistance Value	Tolerance
Ho	YLR	2512	2W	4mR	±1%

Product Dimensions

Project	Parameters		
Size(mm)	L（6.4±0.2）	W（3.2±0.2）	C（0.9±0.2）
	T（0.75±0.2）		
Product Code： Shenzhen Milliohm Electronic Ltd Controlled documents	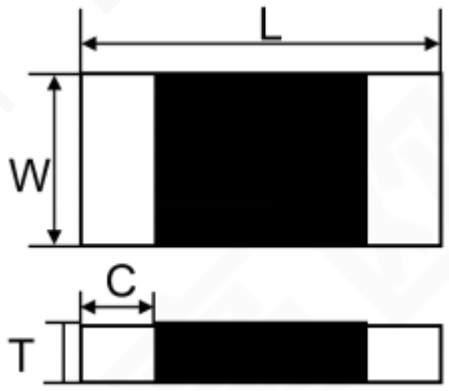		
Rated Power	2W		
Maximum Rated Current	22.36A		
Temperature Coefficient of Resistance	±50ppm/℃		
Resistance	4mR		
Operating Temperature Range	-55℃~+170℃		
Customer Approval	Customer Signature：		Signing Time：
Note			

Power Derating Curve

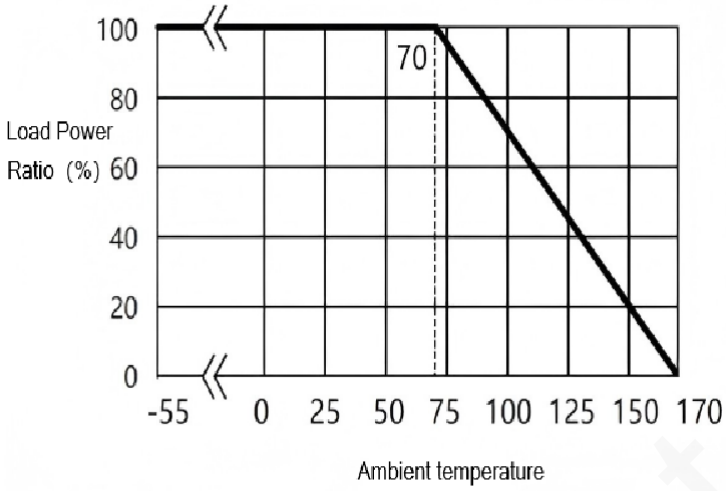

Operating Temperature Range: -55 to +170°C Power Derating Chartat 70°C Resistance Temperature

Recommended Soldering Reference

Peak: 260+5/-0 ℃， 5 s;

Pre - heat zone: 150~180℃， 90±30 s;

Soldering zone: ≥230℃，30±10 s。

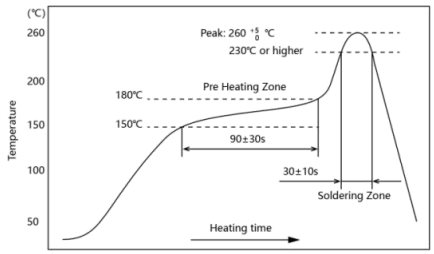

Reflow Soldering Profile

Recommended Pad Dimensions (Unit： mm)

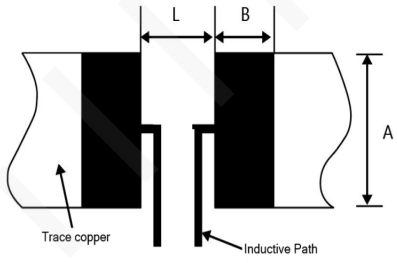

Resistancevalue	A	L	B
4mR	4.0±0.1	4.1±0.1	2.1±0.1

Rated Current Calculation Formula

$$I = \sqrt{P/R}$$

I	P	R
Ratedcurrent(A)	Rated Power(W)	Resistance value(Ω)

■ Reliability Testing

Test Items	Test Method (In accordance with standardsRefer to IEC 60115,60068; JIS-C 5201-1)	Test Requirements
Short-term overload	5 times rated power, maintained for 5 seconds	△R≤± (1%+0.05mΩ)
Temperature coefficient	+25℃~+125℃	Reference Physical Characteristics TCR Specifications
Insulation Resistance	Apply a DC voltage of 100V ± 15V between the electrode and substratema intain for 60 seconds, then measure the insulation resistance.	>100 MΩ
Withstand voltage	Apply an alternating current with a rms value equal to the maximum overload voltage at a rate of approximately 100V/s between the electrode and substrate, maintaining this for 60±5 seconds.	No breakdown or arcing
Solderability	245°C ± 5°C solder bath, hold for 2 seconds ± 0.5 seconds	Tin coverage area on the electrode >95%
Heat resistance	270°C ± 5°C solder bath, maintain for 10 seconds ± 1 second	△R≤± (0.5%+0.05mΩ), No visible damage
Bending Test	Bending distance: 2 mm Hold time: 60 seconds ± 5 seconds	△R≤± (0.5%+0.05mΩ) No mechanical damage
Solvent Resistance Test	Isopropyl alcohol (IPA), 23°C ± 5°C, soak for 10 hours	No visible damage to the exterior
Prolonged high temperatures	High temperature 170°C for 1000 hours	△R ≤± (1.0%+0.05mΩ)
Prolonged low temperatures	Low temperature: -55°C for 1000 hours	△R ≤± (0.5%+0.05mΩ)
Temperature Cycling	-55°C for 30 minutes ~ Ambient temperature for 5 minutes ~ 155°C for 30 minutes, 1000 cycles	△R ≤± (0.5%+0.05mΩ)
Long-term durability	70°C ± 2°C, 1000 hours, rated power, 1.5 hours on/0.5 hours off	△R ≤± (1.0%+0.05mΩ)
Long-term moisture resistance	Long-term moisture resistance: 85℃±2℃, 85%±3% RH, 1000h, rated power (1.5h ON / 0.5h OFF)	△R≤± (1.0%+0.05mΩ)

Milliohm Electronic

Tape Dimensions

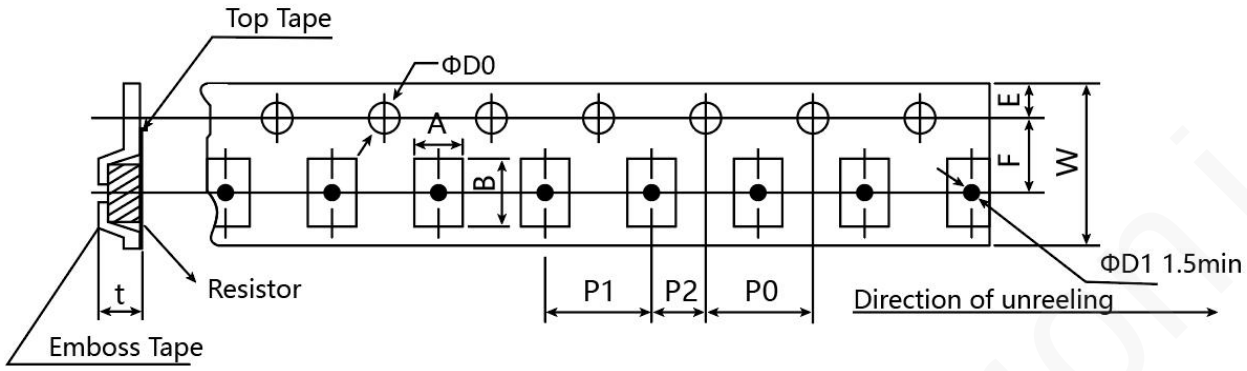

A	B	W	F	E	P1	P2	P0	ΦD0	T
3.5±0.2	6.8±0.2	12±0.2	5.5±0.05	1.75±0.1	4.0±0.1	2±0.05	4±0.05	Φ1.5+0.1	1.0±0.15

RollSpecifications

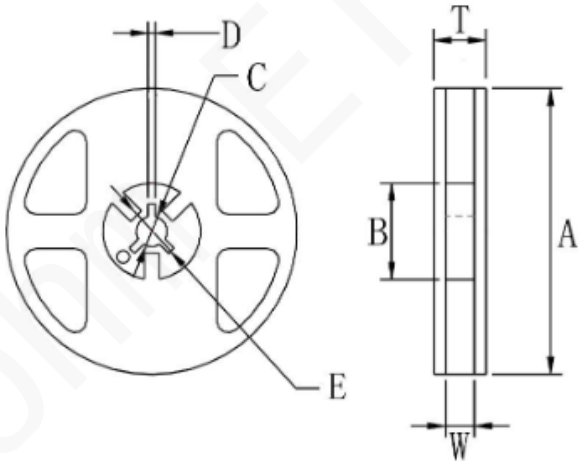

A	B	C	D	E	T	W	Tapereelpackaging
178±2	60±1	13±1	2.0±0.5	> 22	15.4±0.5	13±0.5	4000 pieces per tray

Peel strength of the upper belt

Peel speed: 300 mm/min; peel force ranges from 0.1 N to 0.7 N

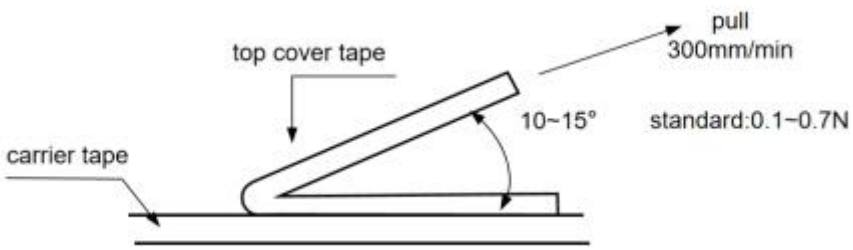

Product Packaging and Instructions for Use:

1. Product Packaging

Tape & Reel Packaging: 4000 PCS per reel.

2. Product Instructions for Use

① During the product application process, pay attention to surface protection to prevent defects such as bumps and scratches on the product surface.
② When handling the product, do not use sharp tools to avoid surface scratches which may lead to resistance offset and product failure.
③ Avoid subjecting the product to mechanical stress during installation and use.
④ The long-term operating power of the product shall not exceed the rated power to prevent resistance drift caused by long-term overload.
⑤ When the product is used under high temperature or poor heat dissipation conditions, derating shall be implemented in accordance with the power derating curve.
⑥ Do not remove the product from the tape before use to avoid risks such as poor solderability caused by product oxidation.

3. Product Storage Instructions

① The recommended storage temperature ranges from 5℃ to 35℃ with relative humidity below 65% RH; humidity shall be kept as low as possible.
② The product shall be stored in a clean, dry environment free of harmful gases.
③ Do not remove the product from its original package before use.
④ Under the above specified storage conditions, the product shelf life is 1 year.
⑤ For products stored for more than 1 year, inspect the surface for oxidation and conduct solderability testing prior to use.

MilliohmElectronic