No.：HoS20260624-103
Version：A0

# Product Acknowledgement Letter

CustomerName：

ProductName: Sealed-body alloy resistor

ProductSpecification: HoYLR2512-2W-12mR-1%

ProductCode:

Dateofdocument: 2026-06-24

| Approved Company Signature | | | |
|---|---|---|---|
| Edited by | Reviewed by | Approved by | CompanySeal |
| ZhenhuanLiao | YongkangHuang | WenyiLeng | |

Shenzhen Milliohm Electronic Ltd
Engineering stamp

| Customer confirmation seal | | | |
|---|---|---|---|
| Acknowledged by | Reviewed by | Approved by | Company Seal |
| | | | |

Milliohm Electronic

## Purpose

This acknowledgment document describes the sample characteristics and inspection standards to facilitate better communication with customers, reach mutualagreement, and prevent product quality disputes arising from insufficient communication.

## Scope of Application

This Certificate of Acceptance applies to the samples provided by Shenzhen Milliohm Electronic Co.,Ltd and covers the product characteristics and inspectionstandards .

## Order Association

By acknowledging this confirmation, the customer certifies that the specifications and models of materials under all contract orders with Shenzhen Milliohm Electronic Co.,Ltd are consistent with the delivered products. If no objection or confirmationis received, this confirmation shallbe deemed effective two weeks after the date of receipt by the customer.

## Product Features

1.Sulfur resistance
2.Metallized material
3.Ultra-long-term stability
4.Halogen-free and lead-free, compliant with ROHS
5. Stable material
6. High rated power
7. Ultra-low temperature coefficient
8. Exceptional reliability

## Product Application Scope

1.Digital Products
2. Chargers
3.Smart Home Devices
4.Consumer Electronics
5.Current Sensing and Voltage Dividing
6.Power Adapters
7.Power Tools, Lithium BatteryProtection
8. Major Appliances, Cleaning Appliances

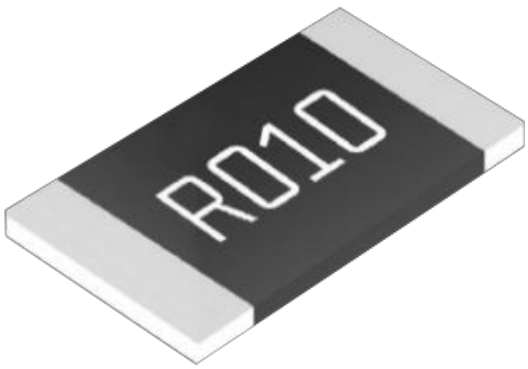


High-tech enterprises IATF16949 ISO9001 RoHS REACH

| Selection Example：HoYLR2512-2W-12mR-1% | Sealed-bodyalloyresistor |
|---|---|

| Ho | YLR | 2512 | 2W | 12mR | 1% |
|---|---|---|---|---|---|
| ↓ | ↓ | ↓ | ↓ | ↓ | ↓ |
| Manufacturer | Product Series | Package | Power Rating | Resistance Value | Tolerance |
| Ho | YLR | 2512 | 2W | 12mR | ±1% |

## Product Dimensions

| Project | Parameters | | |
|---|---|---|---|
| Size(mm) | L（6.4±0.2） | W（3.2±0.2） | C（0.9±0.2） |
| | T（0.75±0.2） | | |
| Product Code：<br>Shenzhen Milliohm Electronic Ltd<br>Controlled documents | 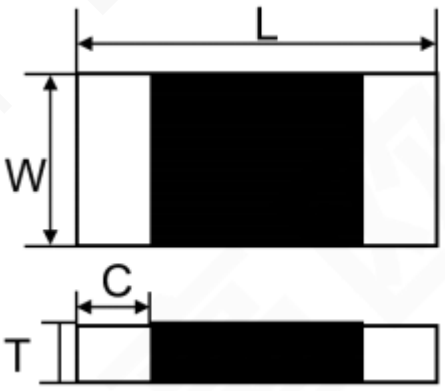 | | |
| Rated Power | 2W | | |
| Maximum Rated Current | 15.81A | | |
| Temperature Coefficient of Resistance | ±50ppm/℃ | | |
| Resistance | 12mR | | |
| Operating Temperature Range | -55℃~+170℃ | | |
| Customer Approval | Customer Signature： | | Signing Time： |
| Note | | | |

## Power Derating Curve

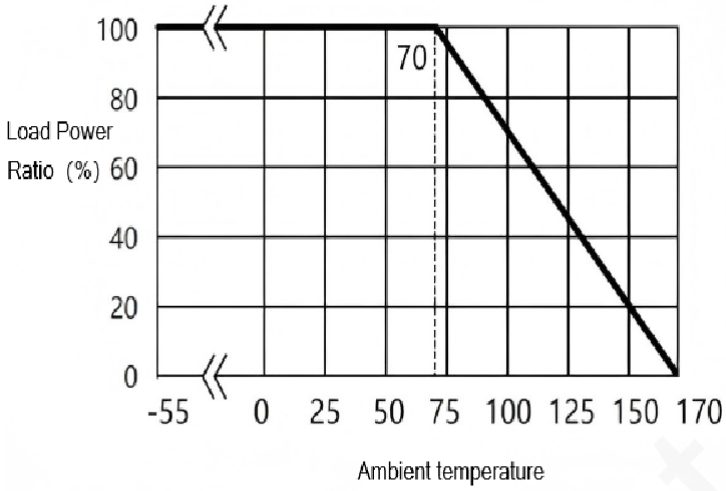


Operating Temperature Range: -55 to +170°C Power Derating Chartat 70°C Resistance Temperature

## Recommended Soldering Reference

Peak: 260+5/-0 ℃， 5 s;

Pre - heat zone: 150~180℃， 90±30 s;

Soldering zone: ≥230℃，30±10 s。

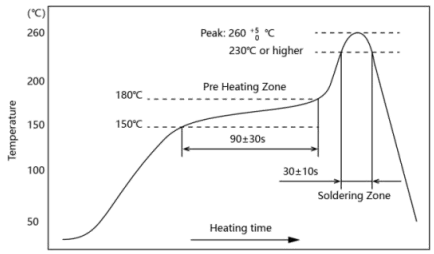


Reflow Soldering Profile

## Recommended Pad Dimensions (Unit: mm)

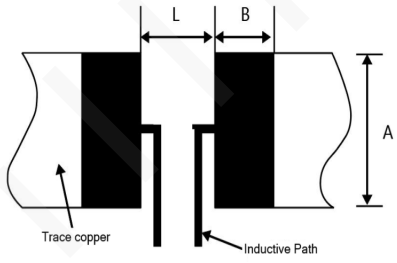


| Resistancevalue | A | L | B |
|---|---|---|---|
| 12mR | 4.0±0.1 | 4.1±0.1 | 2.1±0.1 |

## Rated Current Calculation Formula

$$I = \sqrt{P/R}$$

| I | P | R |
|---|---|---|
| Ratedcurrent(A) | Rated Power(W) | Resistance value(Ω) |

## ■ Reliability Testing

| Test Items | Test Method (In accordance with standardsRefer to IEC 60115,60068; JIS-C 5201-1) | Test Requirements |
|---|---|---|
| Short-term overload | 5 times rated power, maintained for 5 seconds | △R≤± (1%+0.05mΩ) |
| Temperature coefficient | +25℃~+125℃ | Reference Physical Characteristics TCR Specifications |
| Insulation Resistance | Apply a DC voltage of 100V ± 15V between the electrode and substratema intain for 60 seconds, then measure the insulation resistance. | >100 MΩ |
| Withstand voltage | Apply an alternating current with a rms value equal to the maximum overload voltage at a rate of approximately 100V/s between the electrode and substrate, maintaining this for 60±5 seconds. | No breakdown or arcing |
| Solderability | 245°C ± 5°C solder bath, hold for 2 seconds ± 0.5 seconds | Tin coverage area on the electrode >95% |
| Heat resistance | 270°C ± 5°C solder bath, maintain for 10 seconds ± 1 second | △R≤± (0.5%+0.05mΩ), No visible damage |
| Bending Test | Bending distance: 2 mm Hold time: 60 seconds ± 5 seconds | △R≤± (0.5%+0.05mΩ) No mechanical damage |
| Solvent Resistance Test | Isopropyl alcohol (IPA), 23°C ± 5°C, soak for 10 hours | No visible damage to the exterior |
| Prolonged high temperatures | High temperature 170°C for 1000 hours | △R ≤± (1.0%+0.05mΩ) |
| Prolonged low temperatures | Low temperature: -55°C for 1000 hours | △R ≤± (0.5%+0.05mΩ) |
| Temperature Cycling | -55°C for 30 minutes ~ Ambient temperature for 5 minutes ~ 155°C for 30 minutes, 1000 cycles | △R ≤± (0.5%+0.05mΩ) |
| Long-term durability | 70°C ± 2°C, 1000 hours, rated power, 1.5 hours on/0.5 hours off | △R ≤± (1.0%+0.05mΩ) |
| Long-term moisture resistance | Long-term moisture resistance: 85℃±2℃, 85%±3% RH, 1000h, rated power (1.5h ON / 0.5h OFF) | △R≤± (1.0%+0.05mΩ) |

Milliohm Electronic

## Tape Dimensions

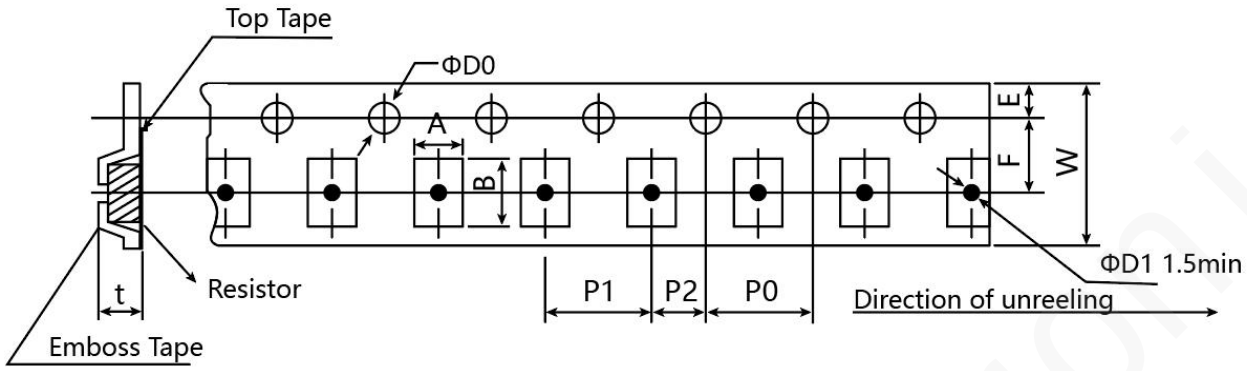


| A | B | W | F | E | P1 | P2 | P0 | ΦD0 | T |
|---|---|---|---|---|---|---|---|---|---|
| 3.5±0.2 | 6.8±0.2 | 12±0.2 | 5.5±0.05 | 1.75±0.1 | 4.0±0.1 | 2±0.05 | 4±0.05 | Φ1.5+0.1 | 1.0±0.15 |

## RollSpecifications

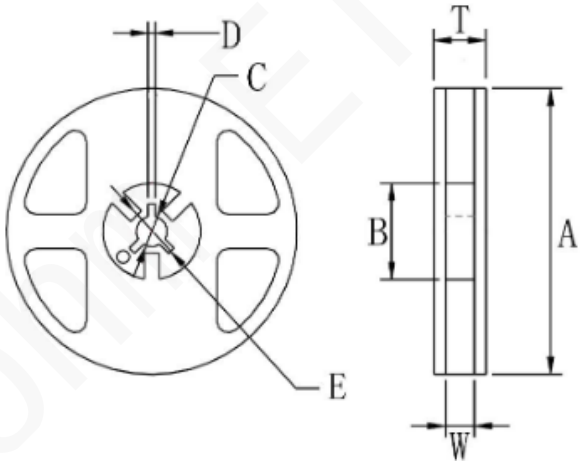


| A | B | C | D | E | T | W | Tapereelpackaging |
|---|---|---|---|---|---|---|---|
| 178±2 | 60±1 | 13±1 | 2.0±0.5 | > 22 | 15.4±0.5 | 13±0.5 | 4000 pieces per tray |

## Peel strength of the upper belt

Peel speed: 300 mm/min; peel force ranges from 0.1 N to 0.7 N

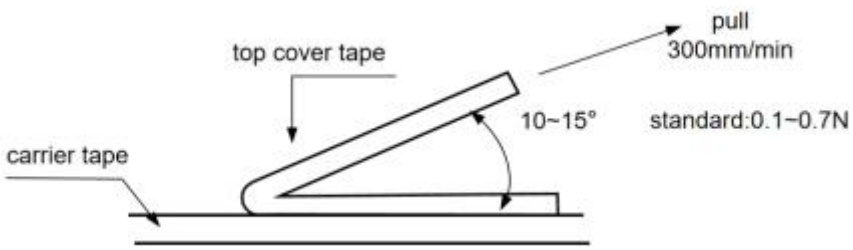

## Product Packaging and Instructions for Use:

### 1. Product Packaging

Tape & Reel Packaging: 4000 PCS per reel.

### 2. Product Instructions for Use

① During the product application process, pay attention to surface protection to prevent defects such as bumps and scratches on the product surface.
② When handling the product, do not use sharp tools to avoid surface scratches which may lead to resistance offset and product failure.
③ Avoid subjecting the product to mechanical stress during installation and use.
④ The long-term operating power of the product shall not exceed the rated power to prevent resistance drift caused by long-term overload.
⑤ When the product is used under high temperature or poor heat dissipation conditions, derating shall be implemented in accordance with the power derating curve.
⑥ Do not remove the product from the tape before use to avoid risks such as poor solderability caused by product oxidation.

### 3. Product Storage Instructions

① The recommended storage temperature ranges from 5℃ to 35℃ with relative humidity below 65% RH; humidity shall be kept as low as possible.
② The product shall be stored in a clean, dry environment free of harmful gases.
③ Do not remove the product from its original package before use.
④ Under the above specified storage conditions, the product shelf life is 1 year.
⑤ For products stored for more than 1 year, inspect the surface for oxidation and conduct solderability testing prior to use.

MilliohmElectronic