产品承认书
SPECIFICATION FOR APPROVAL

客户名称:
CUSTOMER

我司料号:
OUR PART NO. **XRRH3D28-150M**

我司品名:
OUR PART NAME D series power inductor

送样日期:
DATE SAMPLES _____ 数 量:
QUANTITY _____

制造确认 MANUFACTURER APPROVE		
拟制 DRAWN	审核 CHECKED	确认 APPROVED
HuangHexiang	RaoPing	ZhongCuilan

客户确认 CUSTOMER APPROVE

客户名称 CUSTOMER NAME:

客户料号 CUSTOMER P/N:

规格型号 DESCRIPTION: **RH3D28 15uH ±20% 0.4A**

检查結果: ☐ 合格 ☐不合格 签名及盖章:

INSPECT RESULT ACCEPT REJECT SIGNATURE AND STAMP

说明 REMARK:

如对本承认书内容有异议请提出或标记发送至我司，本承认书在未收到异议回复时于本承认书提供一周后生效。

If you have any objection to the contents of this acknowledgment, please raise it or send the mark to us. The acknowledgment
will become effective one week after the acknowledgment is provided in the absence of any objection.

东莞市祥如电子有限公司

DONGGUAN XIANGRU ELECTRONICS CO.,LTD

Tel：**0769-86346548** Fax：**0769-86346358**

email：**dgxiangru@126.com**

产品承认书
SPECIFICATION FOR APPROVAL

客户名称 CUSTOMER		日期 DATE	2024-06-21
客户物料编号 CUSTOMER P/N		客户规格型号 DESCRIPTION	RH3D28 15uH ±20% 0.4A
我司物料编号 OUR PART NO	XRRH3D28-150M	我司品名 OUR PART NAME	D series power inductor

外观尺寸 Appearance of size

单位 Unit：mm

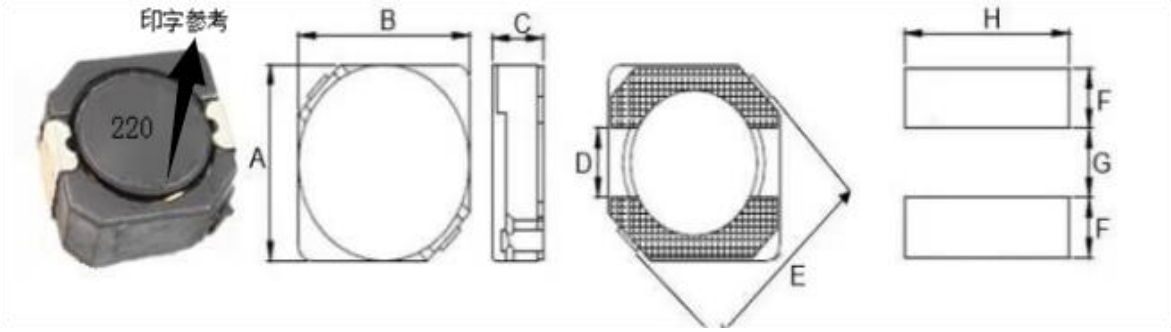

TYPE	A	B	C max	D	E	F Ref	G Ref	H Ref
XRRH3D28	3.8±0.3	3.8±0.3	3.1	1.15	5.2	1.6	1.2	4.4

Taping Dimensions(Unit:mm):

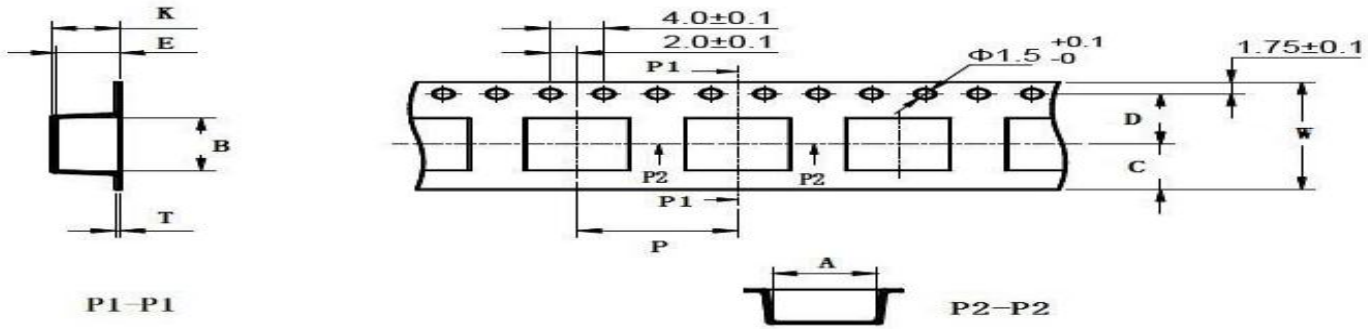

Type											
	W	A	B	C	D	E	P	K Ref	T	MPQ	
XRRH3D28	12.0±0.3	4.35±0.1	4.35±0.1	4.75	5.5±0.1	3.25±0.1	8.0±0.1	3.45	0.4±0.05	3500	

产品承认书
SPECIFICATION FOR APPROVAL

客户名称 CUSTOMER		日期 DATE	2024-06-21
客户物料编号 CUSTOMER P/N		客户规格型号 DESCRIPTION	RH3D28 15uH ±20% 0.4A
我司物料编号 OUR PART NO	XRRH3D28-150M	我司品名 OUR PART NAME	D series power inductor

电性能参数
Electrical performance parameters

Part Number 型号	Inductance (uH) 电感量	精度 precision (±)	测试条件 Testfrequency	直流电阻 DCR(Ω)Max	额定电流 Irms(A)	
XRRH3D28-150M	15.0	20%	100 kHz, 1V	0.4	0.86	

Reel Dimensions(Unit:mm):

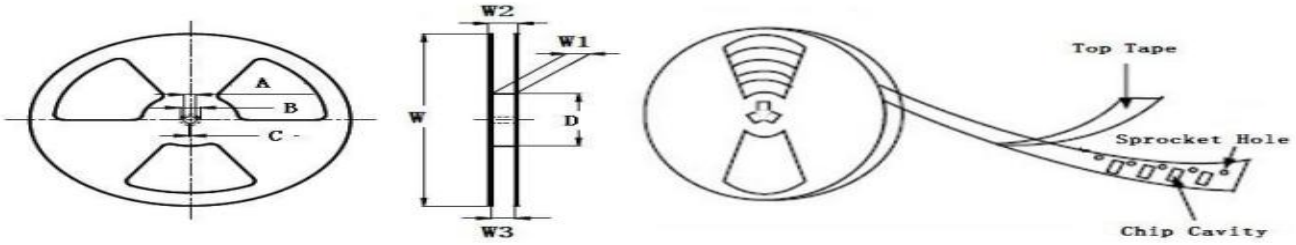

TYPE	W	W1	W2	W3	A	B	C	D	
XRRH3D28	330±2.0	12.4±2.0	13.5max	11.9min	13.0±0.5	21.0±0.8	2.0±0.5	100min	

存储条件 Storage conditions

⑴ 存放货物的库房应满足以下条件：温度：-10 ～ +40℃, 相对湿度：30 ～ 70%。The warehouse for storing goods shall meet the following conditions: temperature:-10 ~+40℃ and relative humidity: 30 ~ 70%.

⑵ 禁止将产品保管在腐蚀性物质中，否则将引起端头氧化，导致降低焊接性。It is forbidden to store the product in corrosive substances, otherwise it will cause oxidation of the end and reduce the weldability.

⑶ 为了避免受潮气、灰尘等物质的影响，产品应保管于货架上。In order to avoid the influence of moisture, dust and other substances, the product should be kept on the shelf.

⑷ 产品保管在库房中，应避免热冲击、振动以及直接光照等等。When the products are stored in the warehouse, thermal shock, vibration and direct light should be avoided.

⑸ 产品属于易碎品，谨防高处跌落。The product is fragile, so beware of falling from a height.

制表 MADE	审核 CHECKED	批准 APPROVED	
HuangHexiang	RaoPing	ZhongCuilan	