8-BIT, 2-CHANNEL, 200 KSPS to 500 KSPS, LOW POWER ANALOG-TO-DIGITAL CONVERTER

FEATURES

- Two Input Channels
- Specified for V_A of 2.70 V to 5.25 V
- Specified Over a Range of Sample Rates
- Throughput Rate: 200 - 500 KSPS
- Zero Latency
- ±0.5LSB INL, ±0.5LSB DNL
- SPI/DSP/MICROWIRE/QSPI-Compatible Serial Interface
- Low Power (typical):
  2.15mW (2.7V, 200KSPS)
  3.60mW (3.3V, 200KSPS)
- Packaged in 8-Lead MSOP

APPLICATIONS

- Portable Systems
- Remote Data Acquisition
- Instrumentation and Control Systems
- Medical Instruments
- Mobile Communications



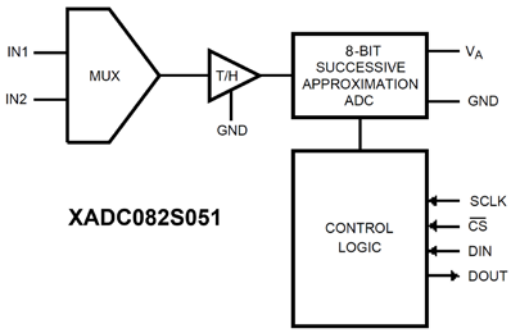

Figure 1. Functional Block Diagram

DESCRIPTION

The XADC082S051 is a low power, 2-channel 8-bit analog-to-digital converter with a high speed serial interface. Unlike the conventional practice of specifying performance at a single sample rate only, the XADC082S051 is fully specified over a sample rate range of 200 KSPS to 500 KSPS. The converter is based upon a successive-approximation register architecture with an internal track-and-hold circuit. The XADC082S051 contains two single-ended analog inputs, IN1 and IN2. The analog input on each of these channels is from 0 to V_A.

The XADC082S051 is available in a 8-lead MSOP package and has an operating temperature range of -40°C to 85°C.

The XADC082S051 is a drop-in replacement for the ADC082S051.

SPECIFICATIONS

At-40℃ to 85℃, f_{SAMPLE} = 200 KSPS and f_{SCLK} = 3.2 MHz, 2.70 V ≤ V_A ≤ 5.25 V, unless otherwise noted.

XADC082S051

PARAMETER	TEST CONDITIONS		MIN	TYP	MAX	UNITS
SYSTEM PERFORMANCE						
Resolution				**8**		Bits
No missing codes				**8**		Bits
Integral linearity			**-0.8**	**±0.5**	**0.8**	LSB
Differential linearity			**-0.8**	**±0.5**	**0.8**	LSB
f_{SAMPLE} Throughput rate	f_{SCLK} = 3.2 MHz, f_{SCLK} = 8 MHz 2.70 V ≤ V_A ≤ 5.25 V		**200**		**500**	KSPS
SNR	f_{IN} = 40 kHz			**49.5**		dB
THD	f_{IN} = 40 kHz			**-70**		dB
I_A Supply current, normal operation	$\overline{CS}$ low	f_{SAMPLE} = 400 KSPS, f_{SCLK} = 6.4 MHz, V_A = 2.7 V		**1.65**	**3.30**	mA
		f_{SAMPLE} =200 KSPS, f_{SCLK} = 3.2 MHz, V_A = 2.7 V		**0.80**	**1.50**	
		f_{SAMPLE} = 400 KSPS, f_{SCLK} = 6.4 MHz, V_A = 3.3 V		**2.30**	**5.30**	
		f_{SAMPLE} =200 KSPS, f_{SCLK} = 3.2 MHz, V_A = 3.3 V		**1.10**	**2.50**	
POWER DISSIPATION						
Normal operation		f_{SAMPLE} = 200 KSPS, f_{SCLK} = 3.2 MHz, V_A = 2.7 V		**2.15**	**4.10**	mW
		f_{SAMPLE} = 200 KSPS, f_{SCLK} = 3.2 MHz, V_A = 3.3 V		**3.60**	**8.20**	mW

PIN CONFIGURATION AND FUNCTION DESCRIPTIONS



Figure 2. Pin Configuration

TERMINAL		DESCRIPTION
NAME	NO.	
$\overline{CS}$	1	Chip select. On the falling edge of $\overline{CS}$, a conversion process begins.
V_A	2	Power supply pin. This voltage is also used as the reference voltage. The V_A range is from 2.70 V to 5.25 V.
GND	3	Ground reference point for all circuitry on the XADC082S051. Both of these pins should connect to the GND plane of a system.
IN2 – IN1	4-5	Analog Input 1 and Analog Input 2. Two single-ended analog input channels that are multiplexed into the on-chip track/hold. The analog input channel to be converted is selected by using the ADD0 through ADD2 bits of the Control Register. The input range for all input channels is 0 to V_A. Any unused input channels should be connected to GND to avoid noise pickup.
DIN	6	Digital data input. The XADC082S051's Control Register is loaded through this pin on rising edges of the SCLK pin.
DOUT	7	Digital data output. The output samples are clocked out of this pin on the falling edges of the SCLK pin.
SCLK	8	Digital clock input. SCLK provides the serial clock for accessing data from the part and writing serial data to the Control Register. This clock input is also used as the clock source for the XADC082S051's conversion process.

TYPICAL CONNECTION

Figure 3 shows a typical connection diagram for the XADC082S051. The 3.3 V supply should come from a stable power supply such as an LDO. The supply to XADC082S051 should be decoupled to the ground. A 1-µF and a 0.1-µF decoupling capacitor are required between the V_A and GND pins of the converter. This capacitor should be placed as close as possible to the pins of the device.

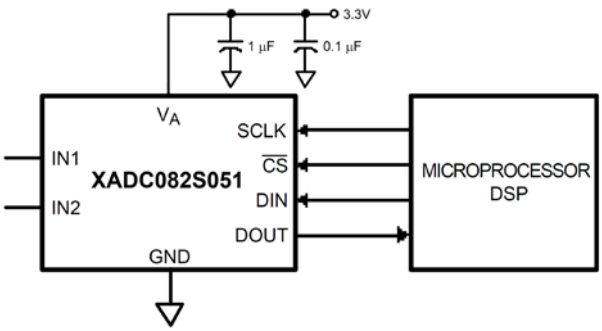

Figure 3. Typical Circuit Configuration

CONTROL REGISTER

The Control Register on the XADC082S051 is an 8-bit, write-only register. Data is loaded from the DIN pin of the XADC082S051 on the rising edge of SCLK. The data is transferred on the DIN line at the same time as the conversion result is read from the part. This requires 16 serial clocks for every data transfer. Only the information provided on the first 8 rising clock edges (after $\overline{CS}$ falling edge) is loaded to the Control Register. MSB denotes the first bit in the data stream. The bit functions are outlined in Table 1 and Table 2. Note that, the default contents of the Control Register on power-up is all zeros.

Table 1. Control Register Bits

Bit7(MSB)	Bit6	Bit5	Bit4	Bit3	Bit2	Bit1	Bit0
DONTC	ZERO	ADD2	ADD1	ADD0	ONE	ZERO	ZERO

Table 2. Control Register Bit Descriptions

Bit	Mnemonic	Comment
7	DONTC	Don't care. The values of these bits do not affect the device.
6	ZERO	A zero must be written to this bit to ensure correct operation of the XADC082S051.
5	ADD2	These three bits determine which input channel is sampled and converted at the next conversion cycle.
4	ADD1	
3	ADD0	
2	ONE	A one must be written to this bit to ensure correct operation of the XADC082S051.
1，0	ZERO	A zero must be written to this bit to ensure correct operation of the XADC082S051.

INPUT CHANNEL SELECTION

On power-up, the default selection is IN2. When returning to normal operation from tri-state, the IN selected will be the same one that was selected prior to tri-state being initiated. Table 3 below shows the multiplexer address corresponding to each analog input from IN2 to IN1 for the XADC082S051.

Table 3. Input Channel Selection

ADD2	ADD1	ADD0	Input Channel
0	0	0	IN2(Default)
0	0	1	IN1
0	1	X	Not allowed. The output signal at the DOUT pin is indeterminate if ADD1 is high

Please note that the difference between XADC082S051 and ADC082S051 is that when XADC082S051 is restarted, the default channel is IN2 instead of IN1.

TIMING DIAGRAM

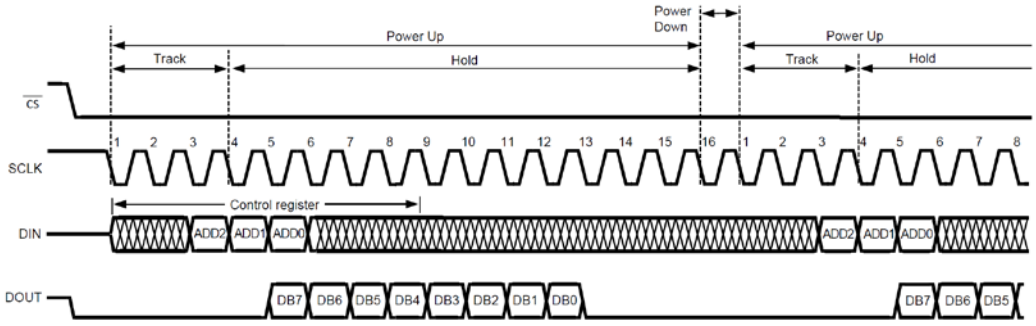

Figure 4. Timing Diagram

The conversion is initiated on the falling edge of $\overline{CS}$. The device outputs data while the conversion is in progress, and it requires 16 serial clock cycles to complete the conversion and access the full results. The XADC082S051 data word contains 4 leading zeros, followed by 8-bit data and 4 trailing zeros in MSB first format.

Once a data transfer is complete, DOUT will return to the tri-state mode, and another conversion can be initiated after the quiet time has elapsed by again bringing $\overline{CS}$ low.

OUTLINE DIMENTIONS

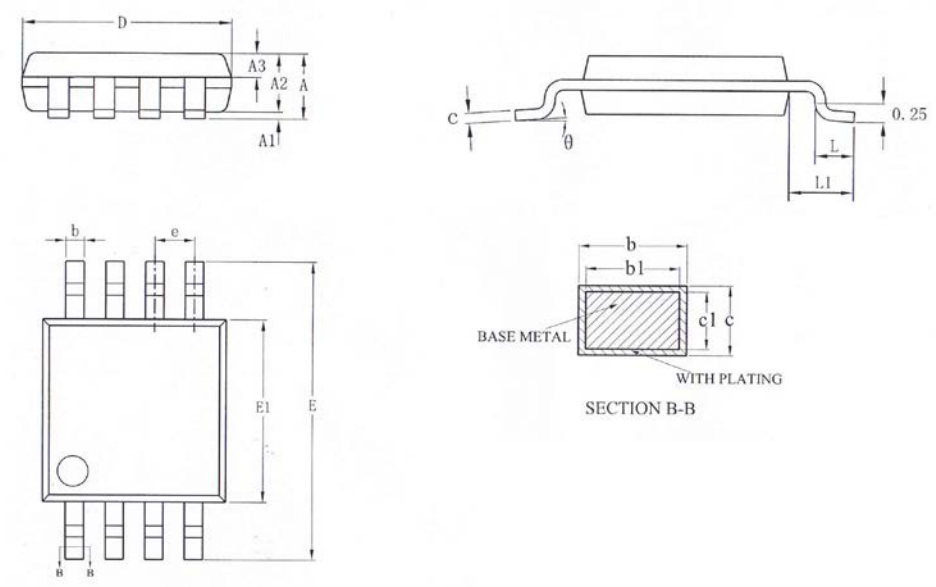

SYMBOL	MILLIMETER		
	MIN	NOM	MAX
A	—	—	1.10
A1	0.05	—	0.15
A2	0.75	0.85	0.95
A3	0.30	0.35	0.40
b	0.28	—	0.36
b1	0.27	0.30	0.33
c	0.15	—	0.19
c1	0.14	0.15	0.16
D	2.90	3.00	3.10
E	4.70	4.90	5.10
E1	2.90	3.00	3.10
e	0.65BSC		
L	0.40	—	0.70
L1	0.95REF		
θ	0	—	8°

NOTES

1. Unpacked ICs, tube-mounted ICs, etc. must be stored in a drying cabinet, and the humidity in the drying cabinet < 20% R.H.
2. After access, the components are stored in an electrostatic packaging protective bag.
3. Anti-static damage: the device is an electrostatic sensitive device, and sufficient anti-static measures should be taken during transmission, assembly and testing.
4. The user should conduct a visual inspection before use, and the bottom, side and surrounding of the circuit can be welded only if it is bright. If oxidation occurs, the circuit can be processed by means of oxidation, and the circuit must be soldered within 12 hours after processing.