BTB20-800CW-AB

MAIN FEATURES 3Q TRIAC

Symbol	Value	Unit
$I_{T(RMS)}$	20	A
V_{DRM} /V_{RRM}	800	V
$I_{GT1/2/3}$	35/35/35	mA

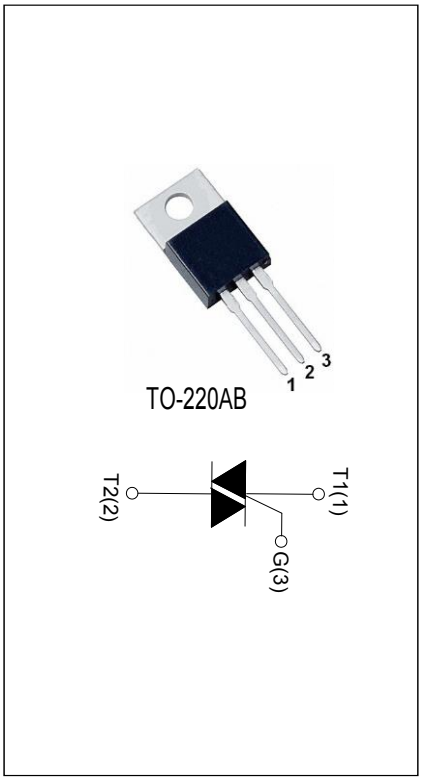

DESCRIPTION:

The BTB20-800CW-AB triac is suitable for general purposeAC switching. It can be used as an ON/OFF function inapplications such as heating regulation, induction motorstarting circuits, forBTB20-800CW snubberless triac isespecially recommended for use on inductive loads. Itcan be driven directly through theMCU I/O port. From T2terminals to external heatsink. Package TO-220AB isRoHS compliant.

ABSOLUTE MAXIMUM RATINGS

Parameter	Symbol	Value	Unit
Storage junction temperature range	T_{stg}	-40-150	℃
Operating junction temperature range	T_j	-40-125	℃
Repetitive peak off-state voltage (T_j=25℃)	V_{DRM}	800	V
Repetitive peak reverse voltage (T_j=25℃)	V_{RRM}	800	V
RMS on-state current (T_C≤90℃)	$I_{T(RMS)}$	20	A
Non repetitive surge peak on-state current (full cycle , t_p=10ms , T_j=25℃)	I_{TSM}	200	A
I^2t value for fusing (t_p=10ms , T_j=25℃)	I^2t	200	A^2s
Critical rate of rise of on-state current (T_j=125℃)	dI/dt	50	A/μs
Peak gate current (t_p=20μs , T_j=125℃)	I_{GM}	4	A
Average gate power dissipation (T_j=125℃)	$P_{G(AV)}$	1	W

ELECTRICAL CHARACTERISTICS (T_j=25℃ unless otherwise specified)

Symbol	Test Condition	Quadrant	Value		Unit
I_{GT}	V_D =12V R_L =100Ω	Ⅰ-Ⅱ-Ⅲ	MAX.	35	mA
V_{GT}		Ⅰ-Ⅱ-Ⅲ	MAX.	1	V
V_{GD}	V_D =V_{DRM} T_j =125℃ R_L =100Ω	Ⅰ-Ⅱ-Ⅲ	MIN.	0.2	V
I_L	I_G =1.2I_{GT}	Ⅰ-Ⅲ	MAX.	60	mA
		Ⅱ		100	
I_H	I_T =500mA		MAX.	60	mA
dV/dt	V_D=2/3V_{DRM} T_j =125℃		MIN.	500	V/μs
(dI/dt)c	T_j=125℃		MIN.	10	A/ms

STATIC CHARACTERISTICS

Symbol	Parameter		Value(MAX.)	Unit
V_{TM}	I_{TM}=28A tp=380μs	T_j=25℃	1.55	V
V_{TO}	Threshold voltage	T_j=125℃	0.87	V
R_D	Dynamic resistance	T_j=125℃	14.6	mΩ
I_{DRM}	V_D =V_{DRM} V_R =V_{RRM}	T_j=25℃	5	μA
I_{RRM}		T_j=125℃	1	mA

THERMAL RESISTANCES

Symbol	Parameter	Value	Unit
$R_{th(j-c)}$	junction to case (AC)	1.25	℃/W

ORDERING INFORMATION

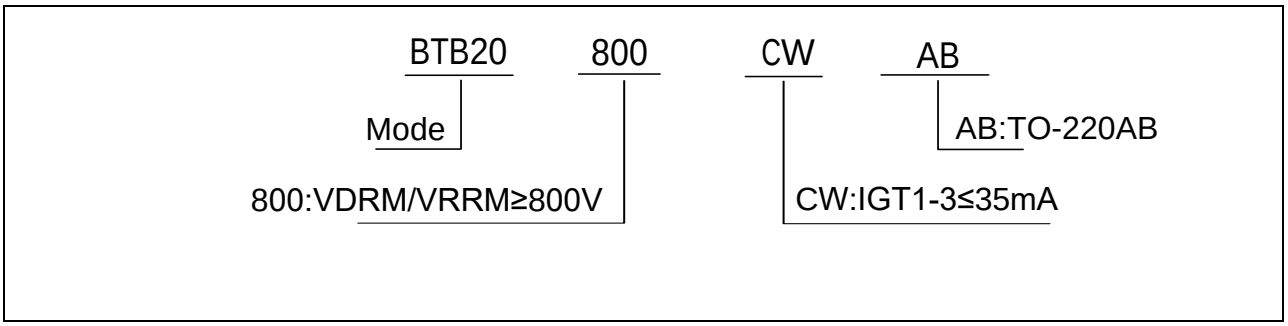

MARKING

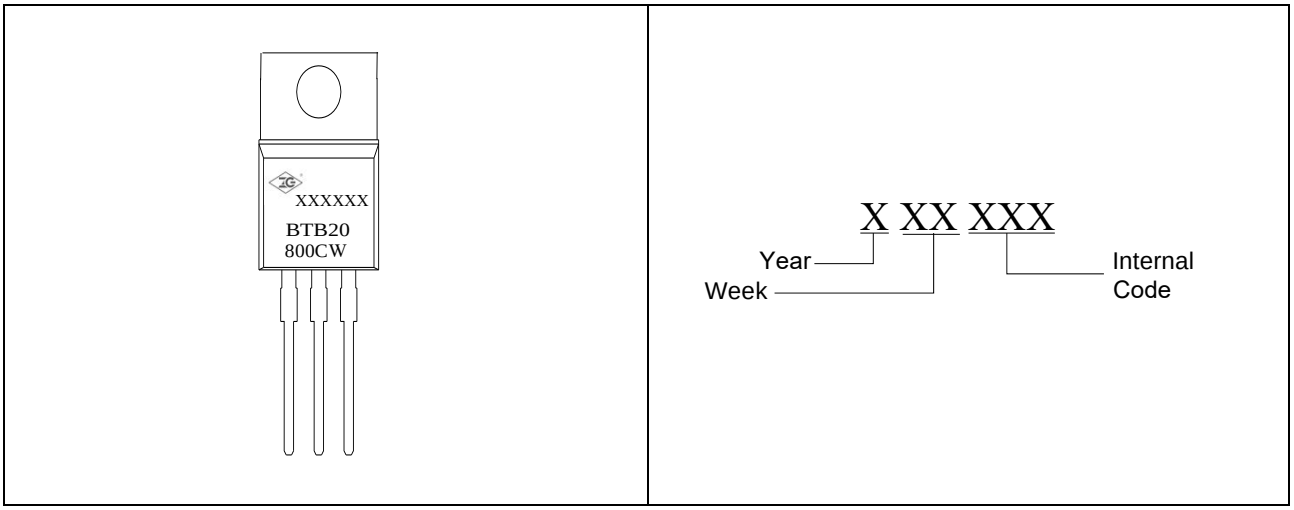

ORDERING INFORMATION

Order code	Voltage V_{DRM}/V_{RRM} (V)	IGT(mA)	Package	Base qty. (pcs)	Delivery mode
		Ⅰ-Ⅱ-Ⅲ			
BTB20-800CW-AB	**800**	**35**	**TO-220AB**	**50**	**Tube**

PACKAGE MECHANICAL DATA

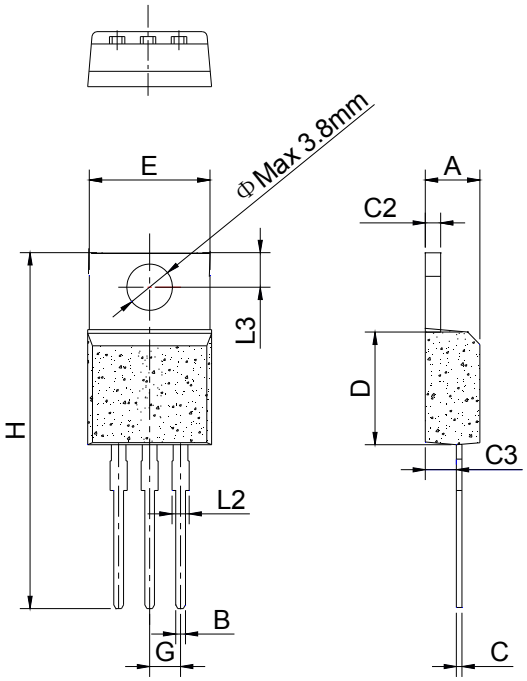

TO-220AB

Ref.	Dimensions		
	Millimeters		
	Min.	Typ.	Max.
A	4.30	4.50	4.70
B	0.60	0.80	1.00
C	0.28	0.38	0.48
C2	1.17	1.27	1.37
C3	2.30	2.50	2.70
D	8.80	9.00	9.20
E	9.80	10.00	10.20
G	2.44	2.54	2.64
H	28.55	28.85	29.15
L2	1.10	1.30	1.50
L3	2.59	2.74	2.89

DELIVERY MODE

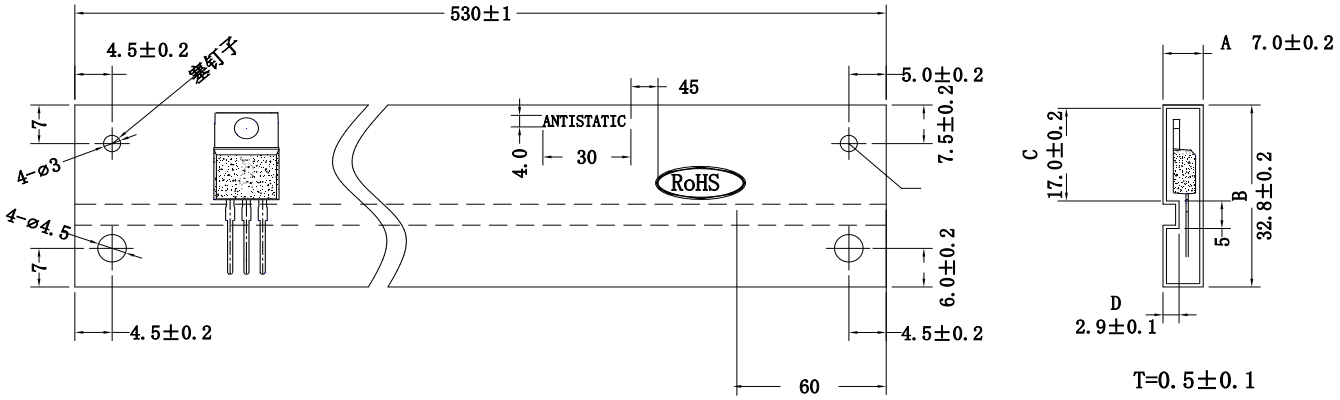

PACKAGE	OUTLINE	TUBE (PCS)	INNER BOX (PCS)	PER CARTON
TO-220AB	TUBE	50	1,000	5,000

FIG.1: Maximum power dissipation versus RMS on-state current (full cycle)

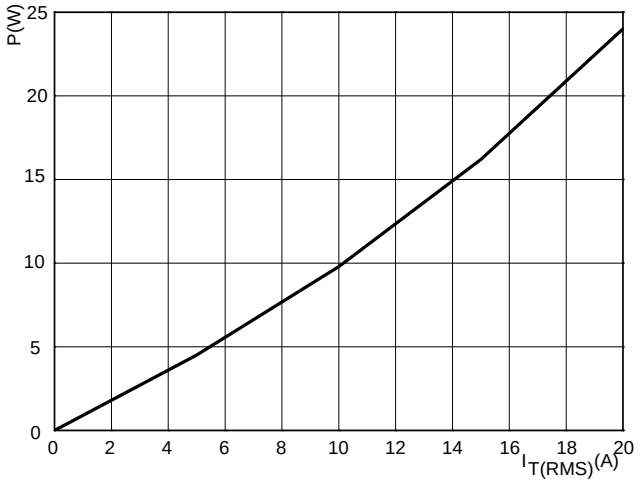

FIG.2: RMS on-state current versus case temperature (full cycle)

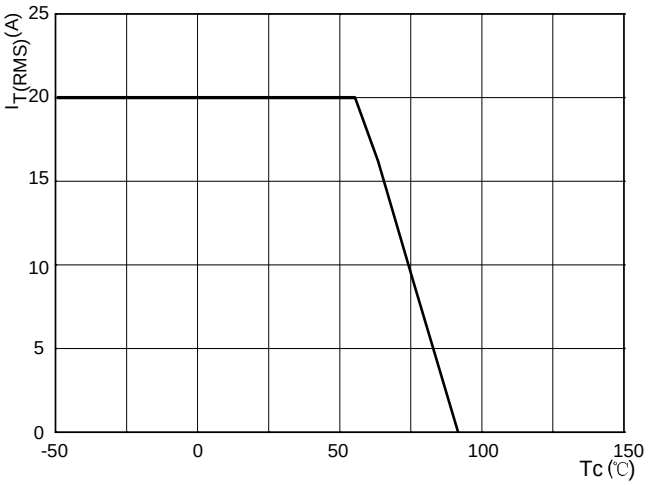

FIG.3: Surge peak on-state current versus number of cycles

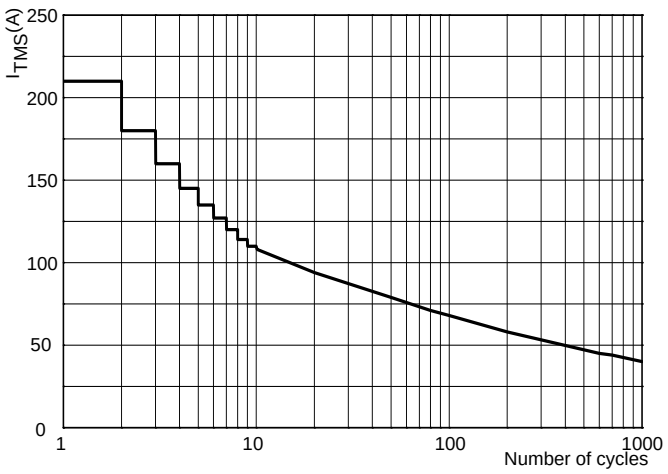

FIG.4: On-state characteristics (maximum values)

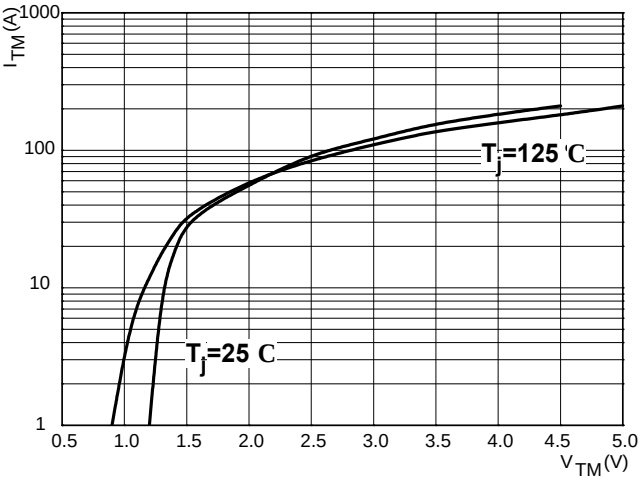

FIG.5: Non-repetitive surge peak on-state current for a sinusoidal pulse with width tp < 10ms

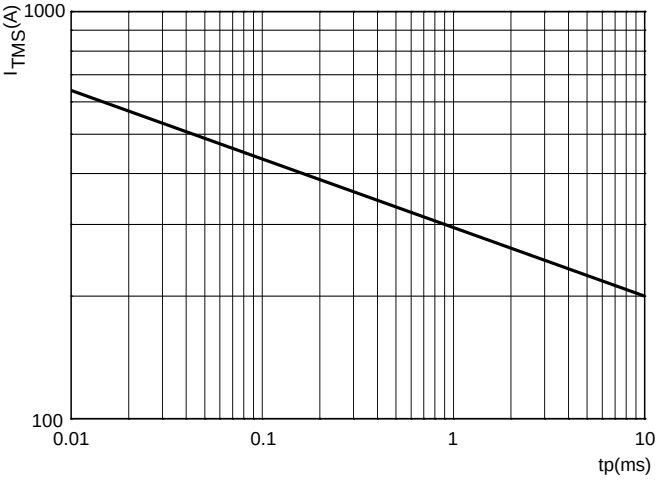

FIG.6: Relative variations of gate trigger current, holding current and latching current versus junction temperature (typical values)

