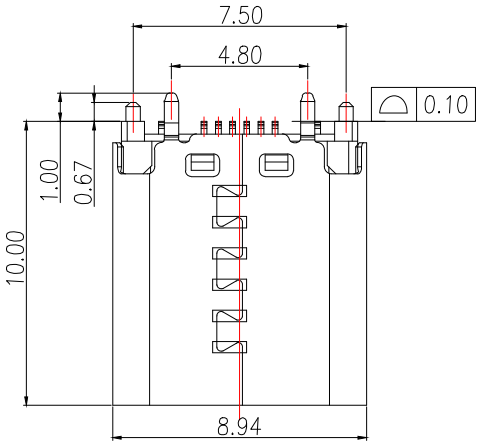

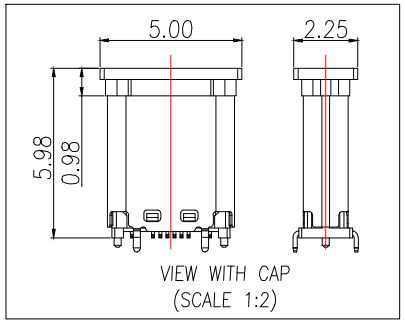

VIEW WITH CAP
(SCALE 1:2)

SPECIFICATION:
1. MATERIAL & FINISH:SEE THE LIST;
2. PLATING SPECIFICATION:
   2-1.CONTACTS:
      Ni 50u" MIN. UNDER PLATED OVER ALL.
      Au PLATED ON THE MATING AREA OF CONTACT.
      Au PLATED ON THE SOLDER AREA.
   2-2.SHELL:Ni 30u" MIN. UNDER PLATED OVER ALL.
   2-3.MID PLATE:CLEAR ONLY
3. MECHANICAL:
   3.1.MATING FORCE:0.5~2.0kgf;
   3.2.UNMATING FORCE:0.8~2.0kgf.
      0.6~2.0kgf AFTER DURABILITY TEST;
   3.3.DURABILITY:10000 CYCLES;
4.ELECTRICAL:
   4.1.CURRENT RATING:5A Max;
   4.2.VOLTAGE RATING:20V Max;
   4.3.DIELECTRIC WITHSTANDING VOLTAGE:100VAc;
   4.4.CONTACT RESISTANCE:40mΩ Ohms Max.;
   4.5.INSULATION RESISTANCE:100M Ohms Min.;
5.ENVIRONMENTAL:
   5.1.OPERATING TEMPERATURE:-40°C~+85°C;
   5.2.WETTING TEMPERATURE:265±5°C,5±0.5s
   5.3.Salt Spray Test:48H Min

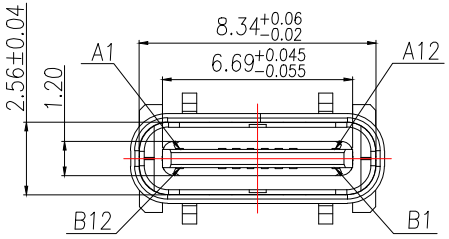

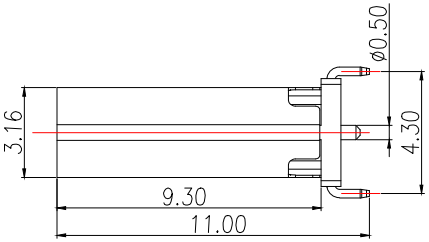

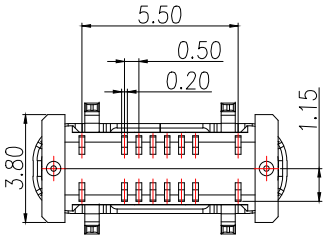

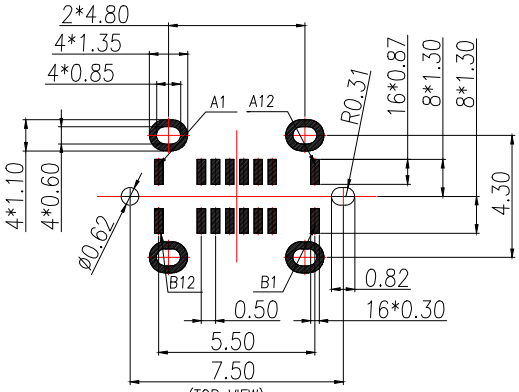

(TOP VIEW)

RECOMMENDED P.C.B. LAYOUT (T:0.8mm)

TOLERANCE UNSPECIFIED ±0.05mm

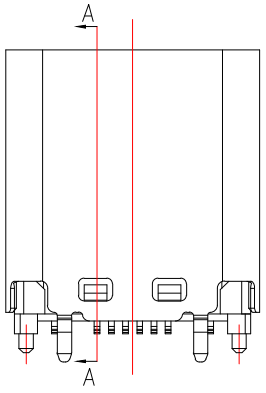

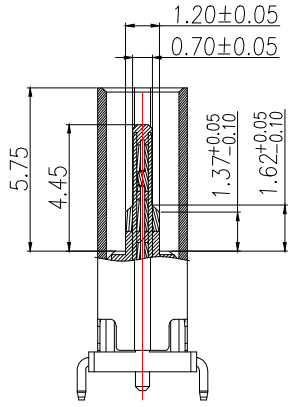

SECTION A-A

PIN DEFINE TABLE			
PIN	SIGNAL	PIN	SIGNAL
A12	GND	B1	GND
A11	——	B2	——
A10	——	B3	——
A9	VBUS	B4	VBUS
A8	SBU1	B5	CC2
A7	D-	B6	D+
A6	D+	B7	D-
A5	CC1	B8	SBU2
A4	VBUS	B9	VBUS
A3	——	B10	——
A2	——	B11	——
A1	GND	B12	GND

NO.	PART NAME	Q'TY	MATERIAL	FINISH
5	CAP	1	High temperature plastic	UL94 V-0,Black
4	Shell	1	Stainless Steel,T=0.30mm	30u"Ni Min.
3	GroundBar	1	Stainless Steel,T=0.15mm	No Plating
2	Contact	16	Copper Alloy,T=0.15mm	Au/Ni-Plated
1	Housing	1	High temperature plastic	UL94 V-0,Black

制图 DRAWN	变更内容 DESCRIPTION	日期 DATE

GENERL TOLERANCE	
X.±0.50	X.°±5°
.X±0.35	.X°±3°
.XX±0.25	.XX°±2.5°

制图 DRAWING	EMMA		
审核 CHECK	EVA		
核准 APPROVAL	JADE		
单位 UNITS	MM	比例 SCALE	1:1

料号 PART NO.	BX-TYPE-C-423	版本 REV.	A
品名 TITLE	TYPE-C 16p 立贴式焊座H10.0mm	页次 SHEET	1/1
客户料号 CUTM.NO.			

Bossie（博锡）

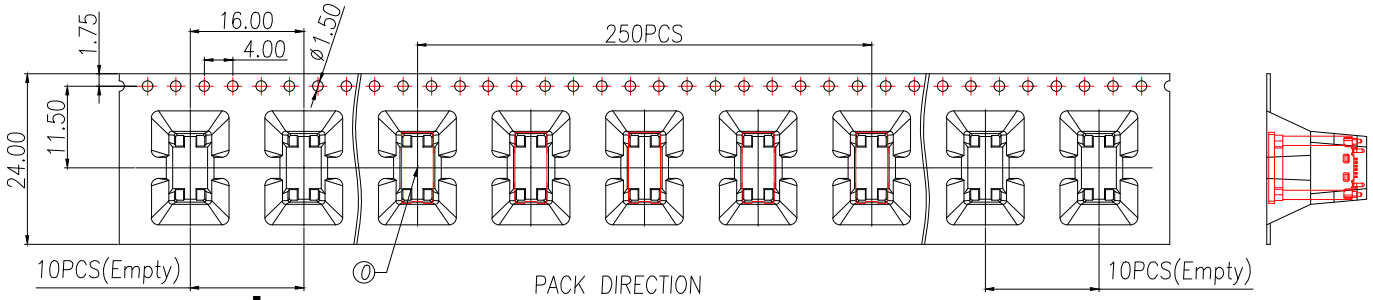

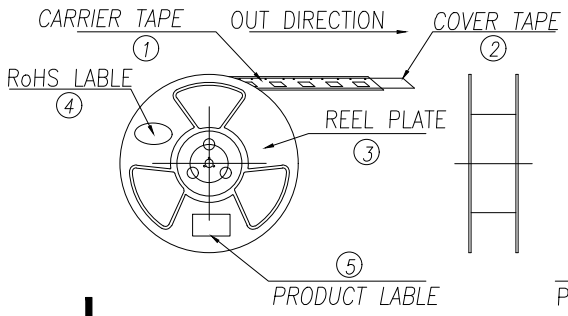

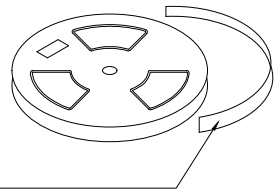

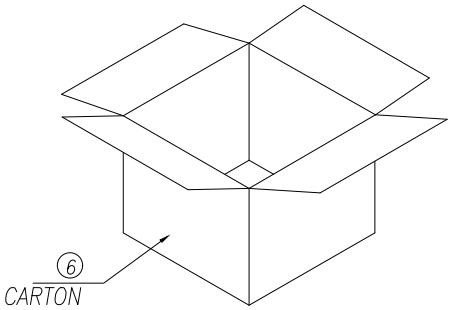

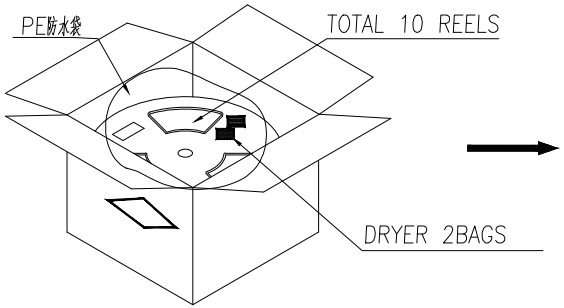

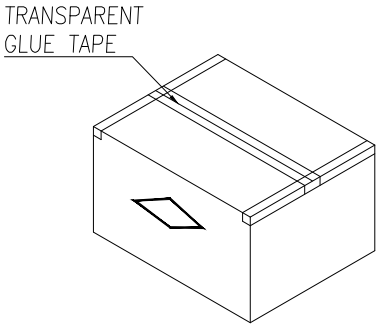

说明:

1.每卷前后各空10PCS,尾部用美纹胶纸封住;

2.将产品放满盘后,再卷一圈保护带,用美纹胶纸将其封住,并贴上1Pcs物料标签;

3.每10卷盘一叠共2500Pcs并装入1个外箱内;

4.在搬运过程中要轻拿轻放;

5.在运输中不可堆放过多(1.8M最高),不可重压;

6.跌落测试条件:

成品箱从1.2米高度自由落体(一角三棱六面):

a.产品不可跑出下带凹槽;

b.产品不可有摔伤,变形;

c.内包装材料不可严重破损.

NO.	NAME	SPEC	Q'TY
0	TYPE C RECEPTACLE		2500PCS/CARTON
1	CARRIER TAPE	W=24mm,T=0.50mm	250PCS/PLATE
2	COVER TAPE	W=21.3mm	10PLATES/CARTON
3	REEL PLATE	ø330*100*24.4mm	10PCS/CARTON
4	RoHS LABEL		10PCS/CARTON
5	PRODUCT LABER		10PCS/CARTON
6	CARTON	350*340*310mm	1PCS/PACKAGE

制图 DRAWN	变更内容 DESCRIPTION	日期 DATE

GENERL TOLERANCE	
X.±0.50	X.°±5°
.X±0.35	.X°±3°
.XX±0.25	.XX°±2.5°

制图 DRAWING	EMMA		
审核 CHECK	EVA		
核准 APPROVAL	JADE		
单位 UNITS	MM	比例 SCALE	1:1

料号 PART NO.	BX-TYPE-C-423	版本 REV.	A
品名 TITLE	TYPE-C 16p 立贴式焊座H10.0mm	页次 SHEET	1/1
客户料号 CUTM.NO.			

Bossie (博锡)