Features

- Low power consumption
- Low voltage drop
- Low temperature coefficient
- Low Quiescent Current: 1uA at 6V
- Output voltage accuracy: tolerance ±2%

Applications

- Battery-powered equipment
- Reference voltage sources
- Cameras, video cameras
- Portable AV systems
- Mobile phones
- Portable games

General Description

Y6206 series are a highly precise, lower consumption, 3 terminal, positive voltage regulators manufactured using CMOS and laser trimming technologies. The series provides large currents with a significantly small dropout voltage. The Y6206 consists of a current limiter circuit, a driver transistor, a precision reference voltage and an error correction circuit. The series is compatible with low ESR ceramic capacitors. The current limiter's fold back circuit operates as a short circuit protection as well as the output current limiter for the output pin. Output voltages are internally by laser trimming technologies. It is selectable in 0.1V increments within a range of 1.2V to 3.6V. Y6206 series are available in SOT-23 and SOT-89 packages.

Order Information

Y6206-①②③④

Designator	Symbol	Description
① ②	Integer	Output Voltage(1.2~3.6V)
②	N	Package: SOT-23
	M	Package: SOT-23-3L
	P	Package: SOT89
④	R	RoHS / Pb Free
	G	Halogen Free

Block Diagram

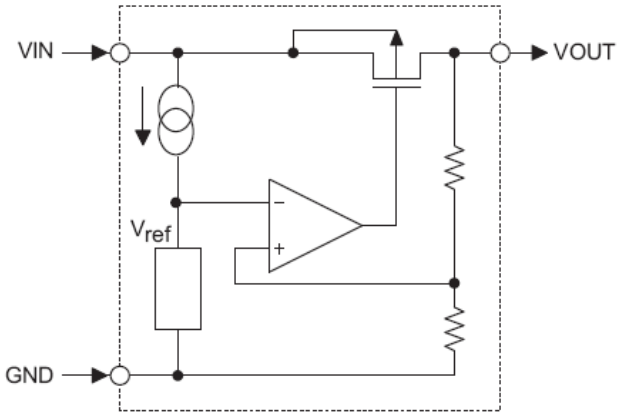

Pin Assignment

SOT-23 and SOT-23-3L (Top View)

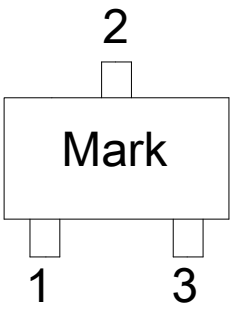

Table1: Y6206-XXNR/Y6206-XXMR series (SOT-23/SOT-23-3L PKG)

PIN NO.	PIN NAME	FUNCTION
1	GND	GND pin
2	VIN	Input voltage pin
3	VOUT	Output voltage pin

SOT89 (Top View)

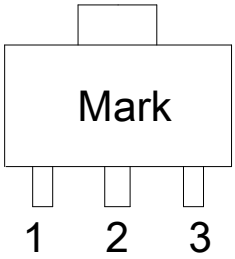

Table2: Y6206-XXPR series (SOT89 PKG)

PIN NO.	PIN NAME	FUNCTION
1	GND	GND pin
2	VIN	Input voltage pin
3	VOUT	Output voltage pin

Marking Rule

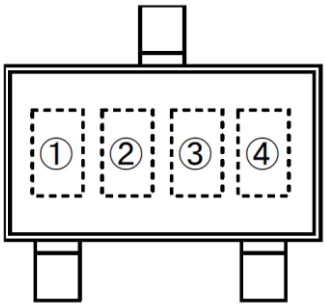

SOT-23
(TOP VIEW)

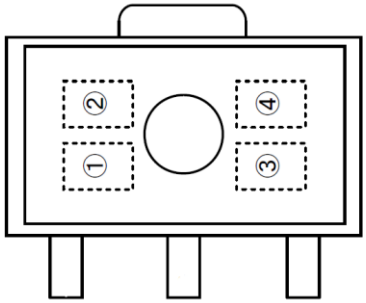

SOT-89
(TOP VIEW)

① represents product number

MARK	PRODUCT SERIES
6	Y6206 ****

② represents 3 pins regulator

MARK		PRODUCT SERIES
VOLTAGE=0.1~3.0V	VOLTAGE=3.1V~6.0V	
5	6	Y6206

③ represents output voltage

MARK	VOLTAGE(V)			MARK	VOLTAGE(V)		
0	-	3.1	-	F	1.6	4.6	-
1	-	3.2	-	H	1.7	4.7	-
2	-	3.3	-	K	1.8	4.8	-
3	-	3.4	-	L	1.9	4.9	-
4	-	3.5	-	M	2.0	5.0	-
5	-	3.6	-	N	2.1	-	-
6	-	3.7	-	P	2.2	-	-
7	-	3.8	-	R	2.3	-	-
8	-	3.9	-	S	2.4	-	-
9	-	4.0	-	T	2.5	-	-
A	-	4.1	-	U	2.6	-	-
B	1.2	4.2	-	V	2.7	-	-
C	1.3	4.3	-	X	2.8	-	-
D	1.4	4.4	-	Y	2.9	-	-
E	1.5	4.5	-	Z	3.0	-	-

④ Y

Absolute Maximum Ratings

Parameter		Symbol	Ratings	Units
Input Voltage		V_{IN}	8	V
Output Current		I_{OUT} Note1	300	mA
Output Voltage		V_{OUT}	V_{SS}-0.3~V_{IN}+0.3	V
Power Dissipation	SOT-23	P_d	0.20	W
	SOT-89		0.50	W
Operating Temperature Range		T_{opr}	-40~+85	℃
Storage Temperature Range		T_{stg}	-55~+125	℃

Note1: $I_{OUT}=P_d/(V_{IN}-V_{OUT})$

Electrical Characteristics

Y6206 for any output voltage （Ta=25℃）

Parameter	Symbol	Conditions	Min.	Typ.	Max.	Unit
Output Voltage	Vout	Vin=Vout+1V 1.0mA≤Iout≤30mA	Vout×0.98	--	Vout×1.02	V
Output Current	Iout	Vin-Vout=1V	--	300	--	mA
Low dropout Note2	Vdrop	Refer to the next table				
Line Regulation	△Vout1/ △ (Vin·Vout)	1.6V≤Vin≤6.5V Iout=40mA	--	0.05	0.2	%/V
Load Regulation	△Vout /ΔIout	Vin= Vout+1V 1.0mA≤Iout≤80mA	--	12	30	mV
Output voltage Temperature Coefficiency	△Vout/(Ta·Vout)	Iout=30mA 0℃≤Ta≤70℃	--	±75	--	Ppm/℃
Supply Current	Iss	--	--	1	3	uA
Input Voltage	Vin	--	--	--	6.5	V

Note2:

Electrical Characteristics by Output Voltage：

Output Voltage Vout(V)	Dropout Voltage Vdif（V）		
	Conditions	Typ.	Max.
Vout≤1.5V	Iout=100 mA	0.39	0.66
Vout=1.6V		0.35	0.57
Vout=1.7V		0.32	0.50
1.8 ≤ Vout ≤ 2		0.30	0.45
2.1 ≤ Vout ≤ 2.7		0.28	0.42
2.8 ≤ Vout ≤ 3.6		0.25	0.35

Typical Application

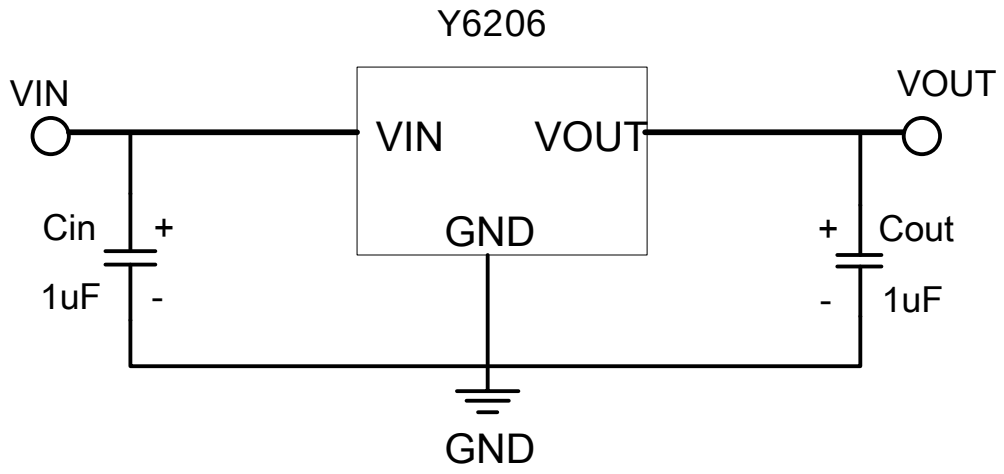

Package Information

3-pin SOT-23 Outline Dimensions

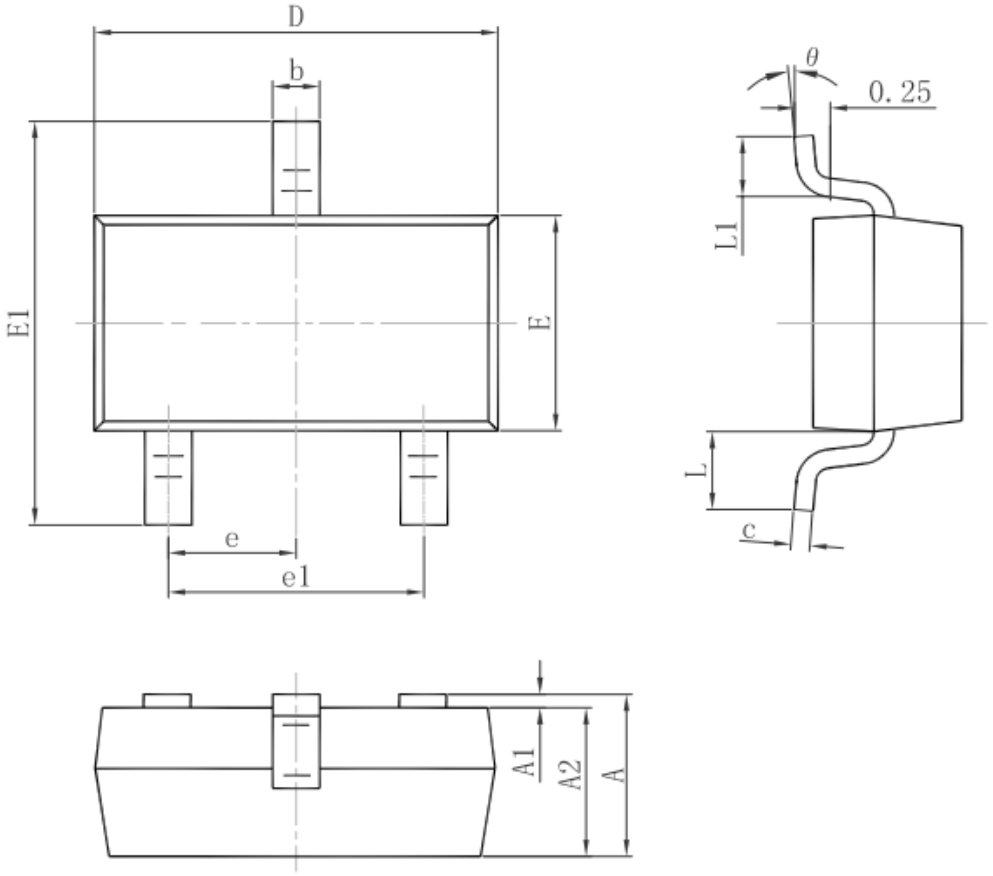

Symbol	Dimensions In Millimeters		Dimensions In Inches	
	Min.	Max.	Min.	Max.
A	0.900	1.150	0.035	0.045
A1	0.000	0.100	0.000	0.004
A2	0.900	1.050	0.035	0.041
b	0.300	0.500	0.012	0.020
c	0.080	0.150	0.003	0.006
D	2.800	3.000	0.110	0.118
E	1.200	1.400	0.047	0.055
E1	2.250	2.550	0.089	0.100
e	0.950 TYP.		0.037 TYP.	
e1	1.800	2.000	0.071	0.079
L	0.550 REF.		0.022 REF.	
L1	0.300	0.500	0.012	0.020
θ	0°	8°	0°	8°

3-pin SOT-23-3L Outline Dimensions

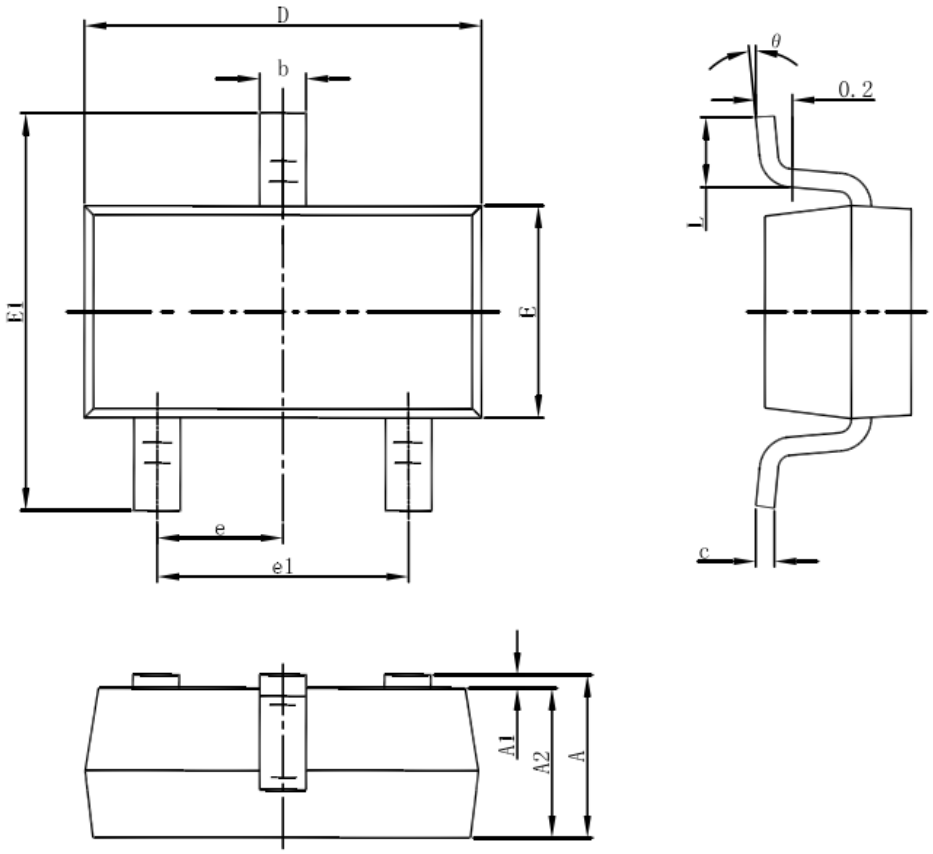

Symbol	Dimensions In Millimeters		Dimensions In Inches	
	Min	Max	Min	Max
A	1.050	1.250	0.041	0.049
A1	0.000	0.100	0.000	0.004
A2	1.050	1.150	0.041	0.045
b	0.300	0.500	0.012	0.020
c	0.100	0.200	0.004	0.008
D	2.820	3.020	0.111	0.119
E	1.500	1.700	0.059	0.067
E1	2.650	2.950	0.104	0.116
e	0.950(BSC)		0.037(BSC)	
e1	1.800	2.000	0.071	0.079
L	0.300	0.600	0.012	0.024
θ	0°	8°	0°	8°

3-pin SOT89 Outline Dimensions

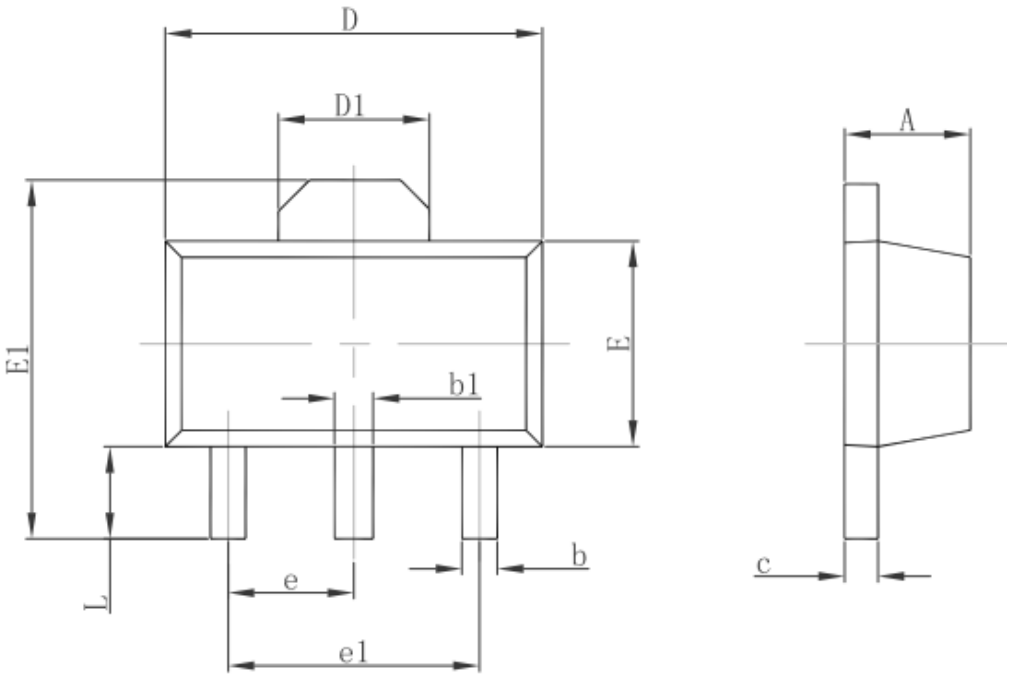

Symbol	Dimensions In Millimeters		Dimensions In Inches	
	Min.	Max.	Min.	Max.
A	1.400	1.600	0.055	0.063
b	0.320	0.520	0.013	0.020
b1	0.400	0.580	0.016	0.023
c	0.350	0.440	0.014	0.017
D	4.400	4.600	0.173	0.181
D1	1.550 REF.		0.061 REF.	
E	2.300	2.600	0.091	0.102
E1	3.940	4.250	0.155	0.167
e	1.500 TYP.		0.060 TYP.	
e1	3.000 TYP.		0.118 TYP.	
L	0.900	1.200	0.035	0.047