# Mechanical:

| REV. | ECN NO. | DESCRIPTION | DATE | APPD |
|---|---|---|---|---|
| A | REL | | 2015-4-29 | |

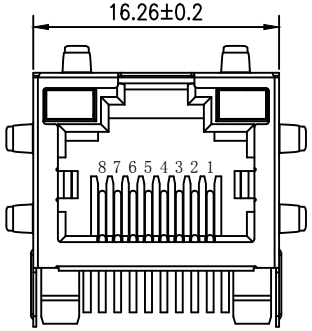


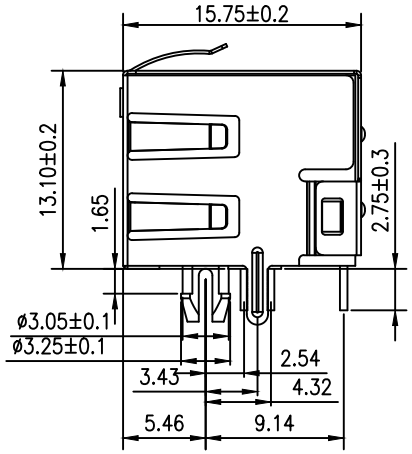


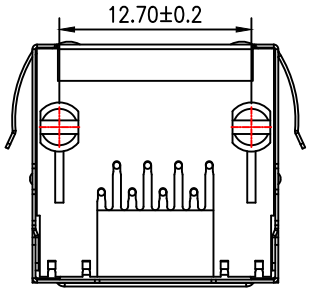


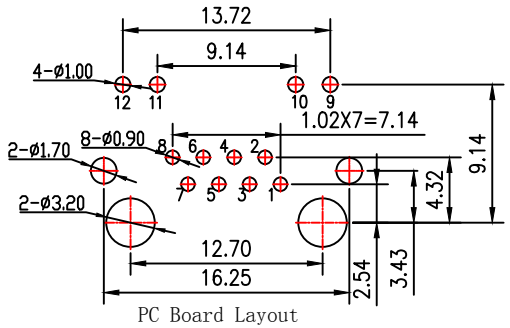


PC Board Layout

NOTES:
ELECTRICAL:
1. VOLTAGE RATING: 125V AC.
2. CURRENT RATING: 1.5A.
3. CONTACT RESISTANCE: 30 mΩ MAX.
4. INSULATION RESISTANCE: 500 MΩ MIN @ 500V DC.
5. DIELECTRIC STRENGTH: 1000V AC 50Hz or 60Hz, 1MIN.

MECHANICAL:
1. INSERT MATERIAL: PBT UL94V-0.
2. CONTACT MATERIAL: ⌀0.46mm C51000(QSn4-0.3)PHOSPHOR BRONZE GOLD PLATING OVER NICKEL. CONTACT GOLD FLASH
3. SHIELD: 0.20mm THICKNESS H65Y BRASS NICKEL PLATED.
4. MATING/UNMATING FORCE: 2.2KG.F MAX.
5. RETENTION STRENGTH: 5.0KG.F MIN BETWEEN JACK AND PLUG.
6. OPERATING LIFE: 750 CYCLES MIN.

ENVIRONMENTAL:
1. STORAGE: -40℃ ～ +85℃ RELATIVE HUMIDITY<70%.
2. OPERATION: -40℃ ～ +85℃.
3. Wave solder tip temperature and time: 250℃,5 Sec.
4. UL Certification: File Number E484635.

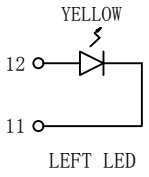


LEFT LED

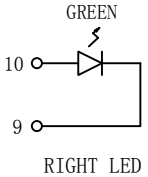


RIGHT LED

| Emitting Color | λp(nm) | VF@IF=20mA | IR @VR=5V |
|---|---|---|---|
| GREEN | 565 | 1.8~2.6V | 10 μA max |
| YELLOW | 585 | 1.8~2.6V | 10 μA max |

RoHS 2011/65/EU

| | | | | | |
|---|---|---|---|---|---|
| X:X | ±0.30 | APPD: | TOM | LINK-PP INT'L TECHNOLOGY CO., LIMITED | |
| X:XX | ±0.25 | CHKD: | JAMES | TITLE: | RJ45 1*1 Connector |
| X:XXX | ±0.05 | DR: | LEO | PART NO.: | LPJE101-0AGNL |
| ANGLES | ±1° | UNIT: | mm | | |
| | | SCALE: | 2/1 | SHEET: 1/1 | REV: A DWG NO.: LP15041621 |