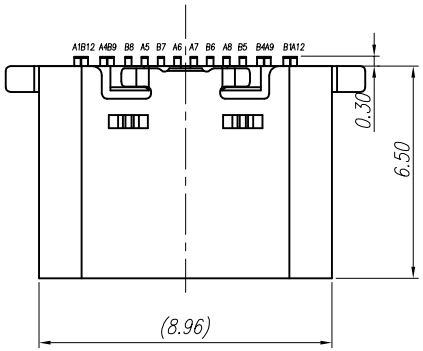

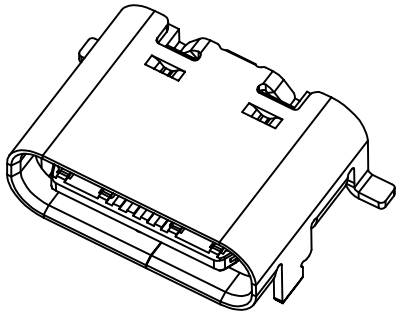

SPECIFICATION:

1.ELECTRICAL CHARACTERISTICS:
- 1.1 CURRENT RATING: 5A
- 1.2 TEMPERATURE RANGE: −40 °C ~ 85 °C
- 1.3 CONTACT RESISTANCE: 30 MILLIONHM MAX.
- 1.4 DIELECTRIC WITHSTANDING VOLTAGE: 100 VAC r.m.s
- 1.5 INSULATION RESISTNACE: 100 MEGOHMS MIN.

2.MECHANICAL CHARACTERISTICS
- 2.1 INSERTION FORCE: 5~20N
- 2.2 EXTRACTION FORCE: Initial:8~20N,ATER TEST 6~20N
- 2.3 DURABILITY:10,000CYCLES

3.THE SHELL LENTH IS LESS THAN THE MINIMUM SPECIFIIED BY THE USB TYPE C STANDARD.AS SUCH IS CONNOT INDENOENDENTLY BE GUARANTEED TO MEET ALL TYPE C MECHANICAL REQUIREMENTS.

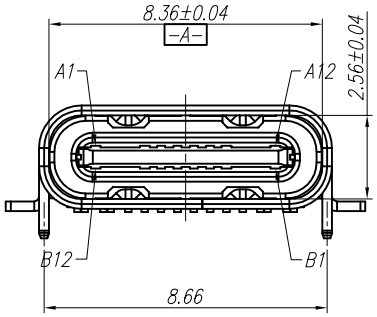

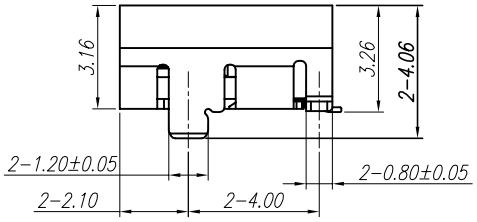

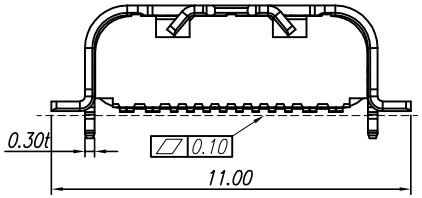

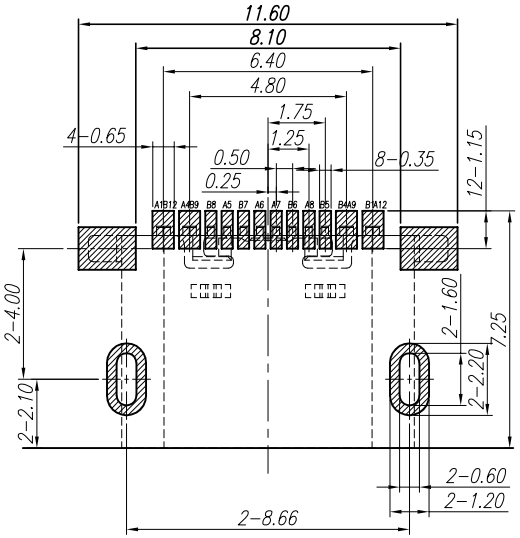

P.C.B LAYOUT VIEW TOLERANCE ±0.05

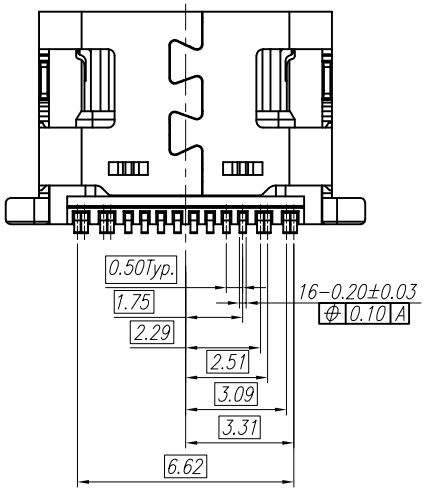

A1	GND	B12	GND
A4	VBUS	B9	VBUS
A5	CC1	B8	SBU2
A6	DP1	B7	DN2
A7	DN1	B6	DP2
A8	SBU1	B5	CC2
A9	VBUS	B4	VBUS
A12	GND	B1	GND
PIN	SIGNAL NAME	PIN	SIGNAL NAME

THIS PRODUCT SHOULD MEET HAZARDOUS MATERIAL CONTROL DIERCTIVE OF JUN SHENG JIE FROM RAW MATERIAL TO MANUFACTURING, PACKAGE AND DELIVERY.

TOLERANCES

UNIT : mm

DISTANCE
- X. ±0.25
- .X ±0.15
- .XX ±0.10
- .XXX ±0.05

ANGLE
- X° ±2°
- .X° ±1°
- ..XX° ±0.5°

DRAWN TONY

CHECKED JACK

APPROVE DAVID

浙江创都电子科技有限公司

TITLE : TYPE-C-16P-BS-QCHT-3MD-6.5

PARTS NO. :

DWG NO. :

SIZE A4 | SCALE 1:1 | SHEET 1 of 1 | REV. A

JSJ_frame_C
Rev. A 2012/06/26