REV.	DESCRIPTION	ECN NO.	NAME	DATE

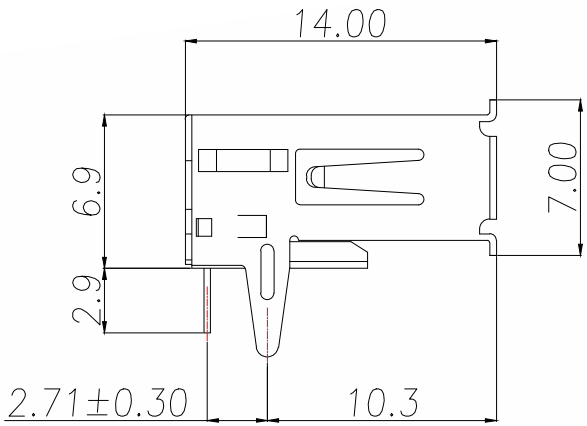

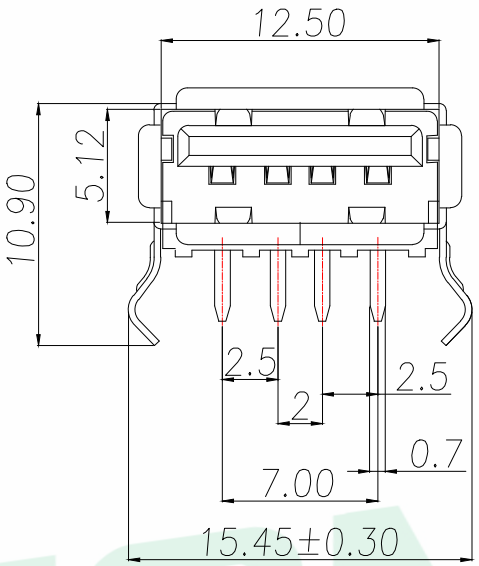

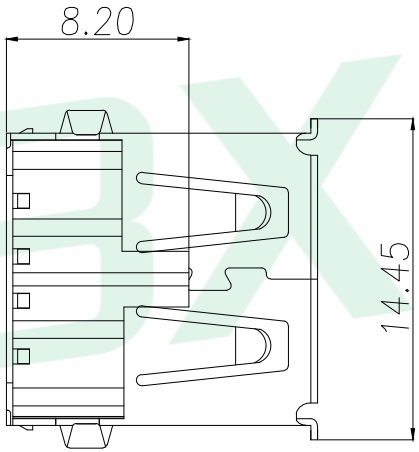

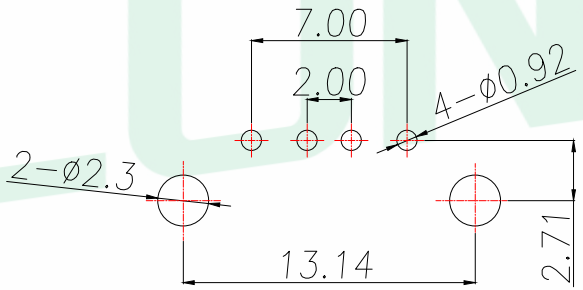

PCB.LAYOUT

TOL:±0.05

备注:

电气性能:

接触阻抗:30毫欧(最大)

绝缘阻抗:1000兆欧(最小)

耐高压:500V AC一分钟

电镀:

端子:接触区域镀金

焊接区镀亮锡100u"Min

外壳:全区域镀镍50u"Min

GENERAL TOLERANCE	DONGGUAN BAOXUN PRECISION TECHNOLOGY CO., LTD	BXCONN®
DIM. TOL. x. ±0.30 x.x ±0.20 x.xx ±0.10 GENERAL ANGLE: x.° ±2.0° x.x° ±1.0° x.xx°	TITLE: USB AF 90度 弯脚有盖	
	DWG. NO.: USB-AF-90-WJ / CHECKED: MAX	
	PART NO.: USB-AF-90-WJ / DRAWN: ELLA	
	UNIT: mm / SCALE: none / SHEET: 1of 1 / DWG. SIZE: A4 / LAYER: bxconn / APPROVED: WILL	