REV.	DESCRIPTION	ECN NO.	NAME	DATE

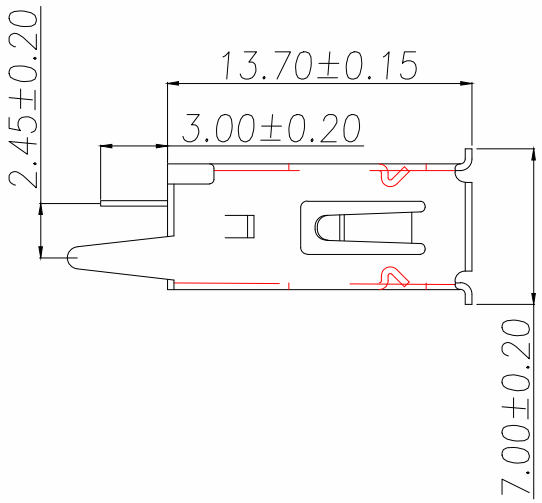

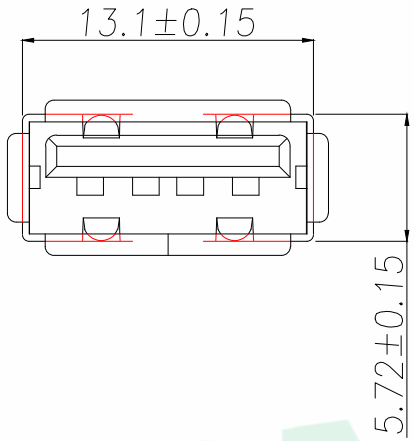

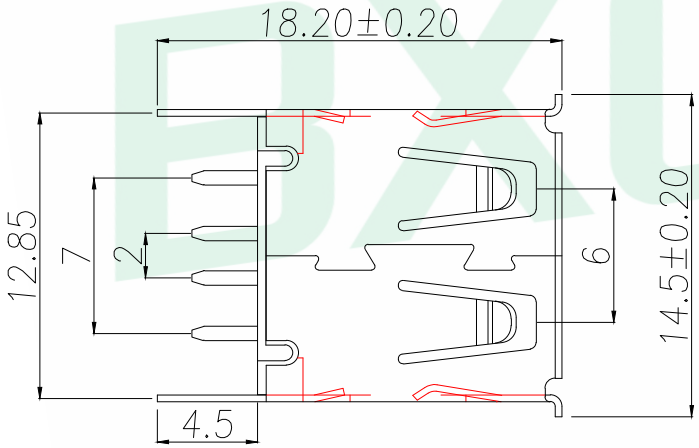

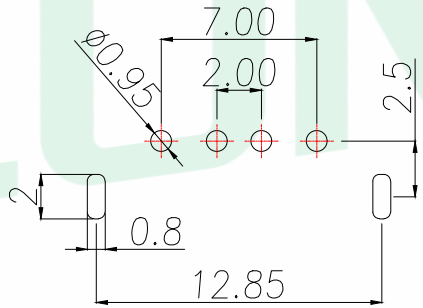

PCB.WELDING DRAWING (TOLERANCE:±0.05)

Specifications:
Electrical:
1.Current Rating
1.5A/contact terminal
2.Voltage Rating
30V DC
3.Contact Resistance
30 milliohms MAX
4.Dielectnic Withstanding Voitage:
500 V AC AT Sea Levol
5.Lnsulation Resistance:
1000MEGA ohms MIN
Mechanical:
1.Cnnector Mate and Unmate ForceMate
Mate force:3.75kgf (MAX)
Unmate force:1.02kgf (MIN)
2.Terminal Retenion1.2kgf (MIN)
Matorial:
1.Housing:Hing Temperature Tnermaplastics,UL 94V-0 PBT/LCP White/Black
2.Contact:Copper Alloy C2680
3.Shell: Copper Alloy C2680/SPCC
Finish:
1.Contact: Piated Gold in Mating Area;Tin On Solder Talls
2.Shell:
Nickel Plating

Pin Definition		
PIN	Signal Name	Describe
1	VBUS	+5V
2	D-	Neagative Data Channel
3	D+	Positive Data Channel
4	GND	Ground

GENERAL TOLERANCE		DONGGUAN BAOXUN PRECISION TECHNOLOGY CO., LTD		BXCONN®
DIM.	TOL.	TITLE: USB-AF-180°直脚13.7		
x.	±0.30	DWG. NO.: USB-AF-180-13.7	CHECKED: MAX	
x.x	±0.25	PART NO.: USB-AF-180-13.7	DRAWN: ELLA	
x.xx	±0.15	UNIT: mm / SCALE: none / SHEET: 1of 1 / DWG. SIZE: A4 / LAYER: bxconn	APPROVED: WILL	
GENERAL ANGLE:				
x.°	±5.0°			
x.x°	±1.0°			
x.xx°				