250MHz CMOS Rail-to-Rail Output Opamps

Features

- Single-Supply Operation from +2.5V ~ +5.5V
- Rail-to-Rail Output
- -3dB Bandwidth(G=+1): 250MHz (Typ)
- Low Input Bias Current: 1pA (Typ)
- Quiescent Current: 2.8mA/Amplifier (Typ)
- Operating Temperature: -40°C ~ +125°C
- Small Package:
  AD8051 Available in SOT23-5 and SC70-5 Packages
  AD8052 Available in SOP-8,MSOP-8 and DFN-8 Packages
  AD8054 Available in SOP-14 and TSSOP-14 Packages

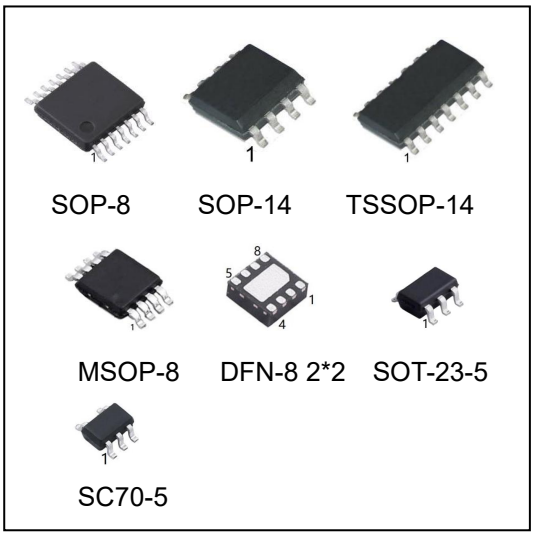

Ordering Information

DEVICE	Package Type	MARKING	Packing	Packing Qty
AD8051M5/TR-HG	SOT-23-5	8051	REEL	3000pcs/reel
AD8051M7/TR-HG	SC70-5(SOT-353)	8051	REEL	3000pcs/reel
AD8052M/TR-HG	SOP-8	8052,AD8052	REEL	2500pcs/reel
AD8052MM/TR-HG	MSOP-8	8052	REEL	3000pcs/reel
AD8052DQ2/TR-HG	DFN-8 2*2	8052,AD8052	REEL	4000pcs/reel
AD8054M/TR-HG	SOP-14	8054,AD8054	REEL	2500pcs/reel
AD8054MT/TR-HG	TSSOP-14	8054,AD8054	REEL	2500pcs/reel

General Description

The AD8051(single), AD8052(dual), AD8054(quad) are rail-to-rail output voltage feedback amplifiers offering ease of use and low cost. They have bandwidth and slew rate typically found in current feedback amplifiers. All have a wide input common-mode voltage range and output voltage swing, making them easy to use on single supplies as low as 2.5V. Despite being low cost, the AD805X series provide excellent overall performance. They offer wide bandwidth to 250MHz (G = +1) along with 0.1dB flatness out to 52MHz (G = +2) and offer a typical low power of 2.8mA/amplifier.

The AD805X series is low distortion and fast settling make it ideal for buffering high speed A/D or D/A converters. The AD8051 has a power-down disable feature that reduces the supply current to 50μA. These features make the AD8051/2 ideal for portable and battery-powered applications where size and power are critical. All are specified over the extended -40℃ to +125℃ temperature range.

Applications

- Imaging
- Photodiode Preamp
- DVD/CD
- Filters
- Professional Video and Cameras
- Hand Sets
- Base Stations
- A-to-D Driver

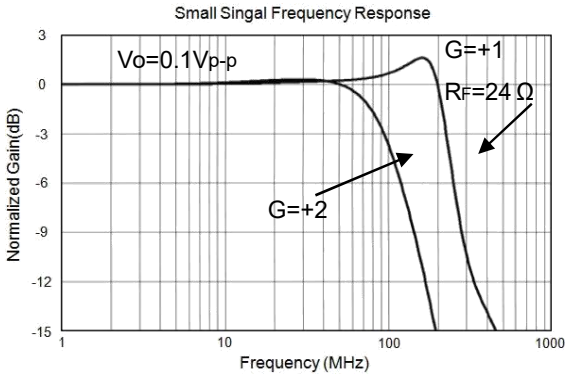

Pin Configuration

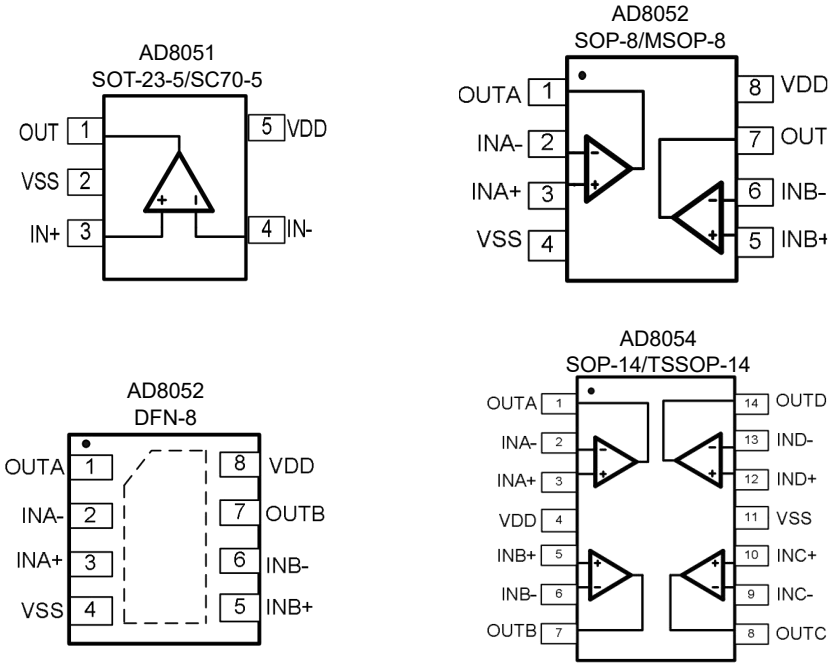

Figure 1. Pin Assignment Diagram

Absolute Maximum Ratings

Condition	Min	Max
Power Supply Voltage (V_{DD} to Vss)	-0.5V	+7.5V
Analog Input Voltage (IN+ or IN-)	Vss-0.5V	V_{DD}+0.5V
PDB Input Voltage	Vss-0.5V	+7V
Operating Temperature Range(1)	-40°C	+125°C
Junction Temperature	+160°C	
Storage Temperature Range	-55°C	+150°C
Lead Temperature (soldering, 10sec)	+260°C	
Package Thermal Resistance (T_A=+25℃)		
SOP-8, θ_{JA}	125°C/W	
MSOP-8, θ_{JA}	216°C/W	
SOT23-5, θ_{JA}	190°C/W	
SC70-5, θ_{JA}	333°C/W	
ESD Susceptibility		
HBM	6KV	
MM	400V	

Note:

Stress greater than those listed under Absolute Maximum Ratings may cause permanent damage to the device. This is a stress rating only and functional operation of the device at these or any other conditions outside those indicated in the operationalsections of this specification are not implied. Exposure to absolute maximum rating conditions for extended periods may affect reliability.

(1)Operating temperature range: -40°C to +125°C. This product is designed for industrial grade applications. For automotive grade versions compliant with AEC-Q100, please conduct internal screening per the standard or contact our sales team for availability.

Electrical Performance Characteristics

(G= +2, R_F=887Ω, R_G=887Ω, and R_L=150Ω connected to V_S/2, unless otherwise noted. Typical values are at T_A =+25°C.)

PARAMETER	CONDITIONS	AD8051/52/54						
		TYP	MIN/MAX OVER TEMPERATURE					
		+25℃	+25℃	0℃ to70℃	-40℃to 85℃	-40℃ to125℃	UNITS	MIN/ MAX
DYNAMIC PERFORMANCE								
-3dB Small Signal Bandwidth	G = +1, Vo = 0.1V p-p, RF = 24Ω, RL = 150Ω	180					MHz	TYP
	G = +1, Vo = 0.1V p-p, RF = 24Ω, RL = 1kΩ	250					MHz	TYP
	G = +2, Vo = 0.1V p-p, RL = 50Ω	55					MHz	TYP
	G = +2, Vo = 0.1V p-p, RL = 150Ω	93					MHz	TYP
	G = +2, Vo = 0.1V p-p, RL = 1kΩ	122					MHz	TYP
	G = +2, Vo = 0.1V p-p, RL = 10kΩ	130					MHz	TYP
Gain-Bandwidth Product	G = +10, RL = 150Ω	115					MHz	TYP
	G = +10, RL = 1kΩ	150					MHz	TYP
Bandwidth for 0.1dB Flatness	G = +2, Vo = 0.1V p-p, RL = 150Ω, RF =887Ω	52					MHz	TYP
Slew Rate	G = +1, 2V Output Step	77/-151					V/μs	TYP
	G = +2, 2V Output Step	88/-119					V/μs	TYP
	G = +2, 4V Output Step	93/-131					V/μs	TYP
Rise-and-Fall Time	G = +2, Vo = 0.2Vp-p, 10% to 90%	4.5					ns	TYP
	G = +2, Vo = 2Vp-p, 10% to 90%	18					ns	TYP
Settling Time to 0.1%	G = +2, 2V Output Step	50					ns	TYP
Overload Recovery Time	VIN · G = +VS	18					ns	TYP
NOISE/DISTORTION PERFORMANCE								
Input Voltage Noise	f = 1MHz	4.9					nV/ Hz	TYP
Differential Gain Error (NTSC)	G = +2, RL = 150Ω	0.03					%	TYP
Differential Phase Error (NTSC)	G = +2, RL = 150Ω	0.08					degree	TYP
DC PERFORMANCE								
Input Offset Voltage (VOS)		±2	±8	±8.9	±9.5	±9.8	mV	MAX
Input Offset Voltage Drift		2					μV/℃	TYP
Input Bias Current (IB)		1					PA	TYP
Input offset Current (IOS)		2					PA	TYP
Open-Loop Gain (AOL)	VO = 0.3V to 4.7V, RL = 150Ω	80	75	74	74	73	dB	MIN
	VO = 0.2V to 4.8V, RL = 1kΩ	104	92	91	91	80	dB	MIN
INPUT CHARACTERISTICS								
Input Common-Mode Voltage Range (VCM)	VCM = -0.1V to +3.5V	-0.2 to +3.8					V	TYP MIN
Common-Mode Rejection Ratio (CMRR)		80	66	65	65	62	dB	

Electrical Performance Characteristics

(G= +2, R_F=887Ω, R_G=887Ω, and R_L=150Ω connected to VS/2, unless otherwise noted. Typical values are at T_A=+25°C.)

PARAMETER	CONDITIONS	AD8051/52/54						
		TYP	MIN/MAX OVER TEMPERATURE					
		+25℃	+25℃	0℃ to70℃	-40℃to 85℃	-40℃ to125℃	UNITS	MIN/ MAX
OUTPUT CHARACTERISTICS								
Output Voltage Swing from Rail	RL = 150Ω	0.12					V	TYP
	RL = 1kΩ	0.03					V	TYP
Output Current		80	60				mA	MIN
Closed-Loop Output Impedance	f＜100kHz	0.08					Ω	TYP
POWER-DOWN DISABLE (AD8051/2 only)								
Turn-On Time		236					ns	TYP
Turn-Off Time		52					ns	TYP
DISABLE Voltage-Off			0.8				V	MAX
DISABLE Voltage-On			2				V	MIN
POWER SUPPLY								
Operating Voltage Range			2.5	2.7	2.7	2.7	V	MIN
			5.5	5.5	5.5	5.5	V	MAX
Quiescent Current (per amplifier)		2.8	3.65				mA	MAX
Supply Current when Disabled per amplifier(AD8051/2 only)		50	70	85	100	137	μA	MAX
Power Supply Rejection Ratio (PSRR)	ΔVS = +2.7V to +5.5V, V_{CM} = (-VS) +0.5	80	67	67	65	62	dB	MIN

Typical Performance characteristics

(Vs=+5V,G= +2, R_F=887Ω,R_G=887Ω,and R_L=150Ωconnected to Vs/2, Typical values are at T_A =+25°C.)

Non-Inverting Large-Signal Step Response

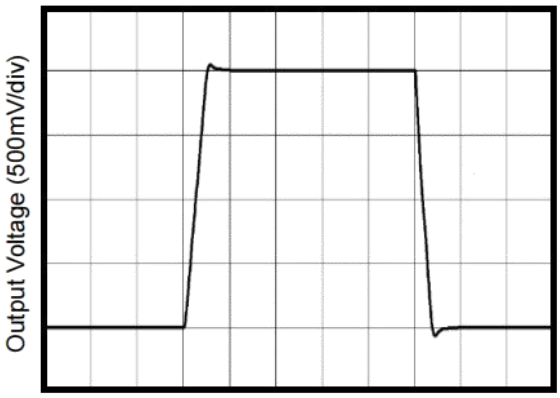

Non-Inverting Small-Signal Step Response

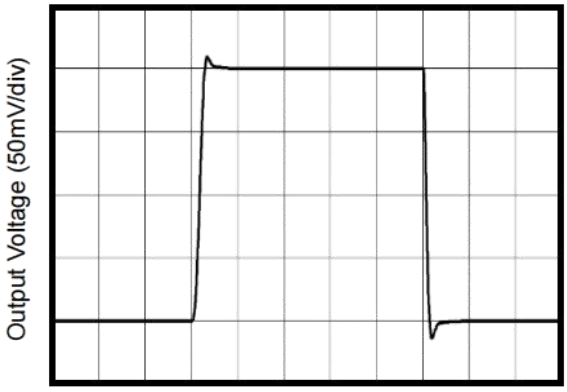

Supply Current vs. Temperature

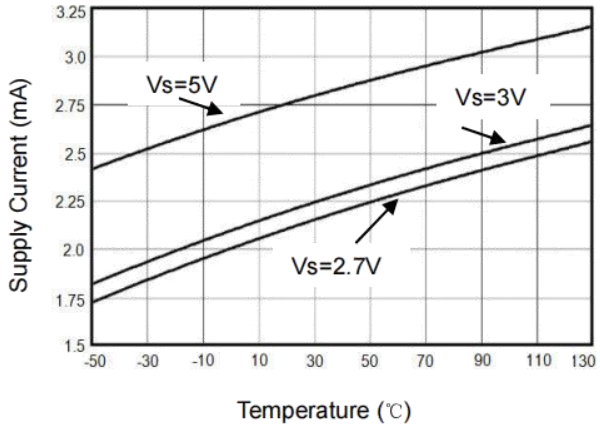

Sutdown Current vs. Temperature

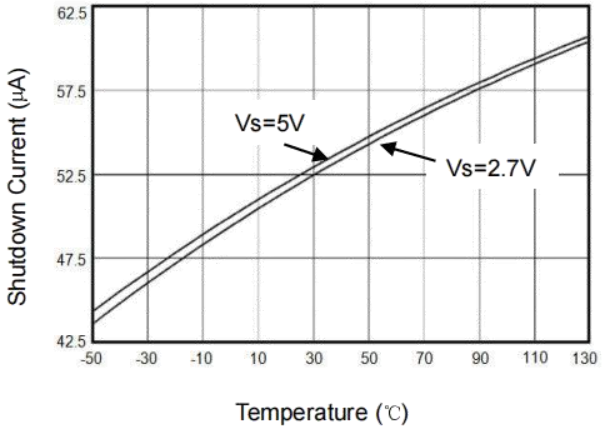

Output Voltage Swing vs. Output Current

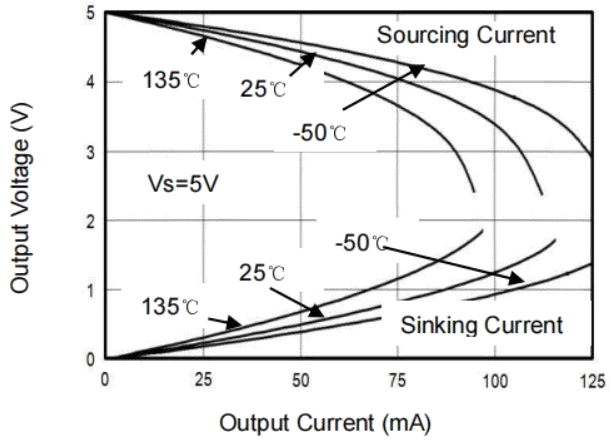

Output Voltage vs. Output Current

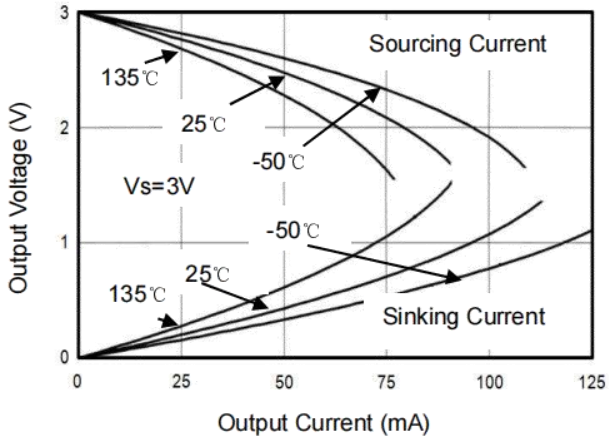

Typical Performance characteristics

((Vs=+5V,G= +2, R_F=887Ω,R_G=887Ω,and R_L=150Ωconnected to Vs/2,Typical values are at T_A =+25°C.)

Non-Inverting Small Signal Frequency Response

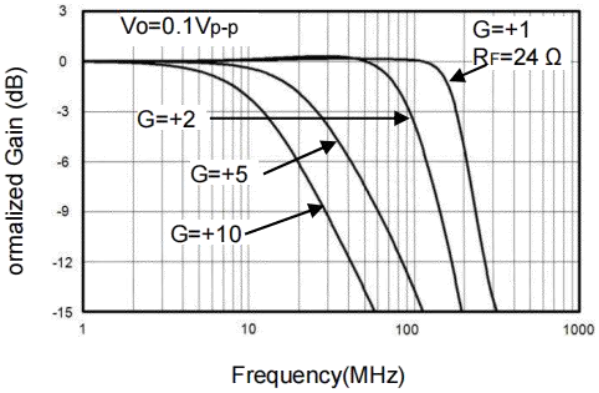

Inverting Small Signal Frequency Response

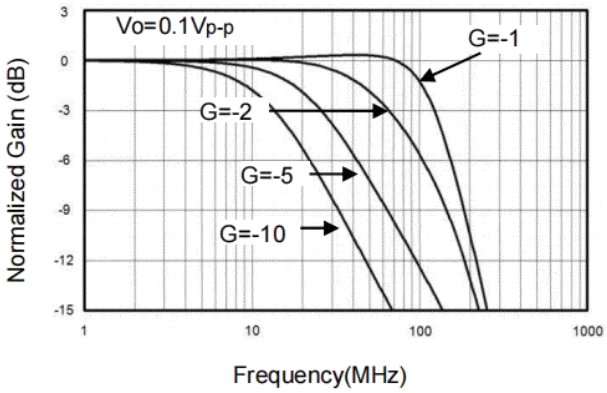

Frequency Response For Various RL

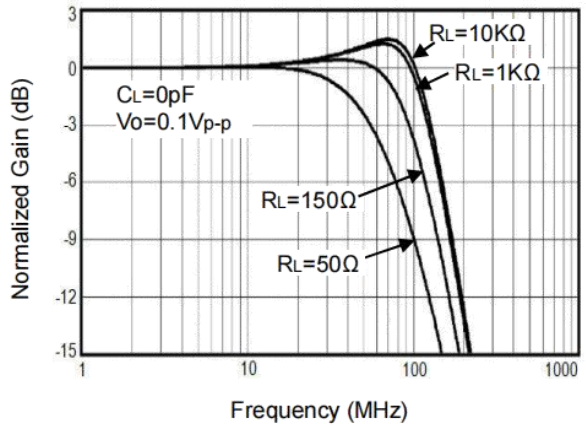

0.1dB Gain Flatness For Various RF

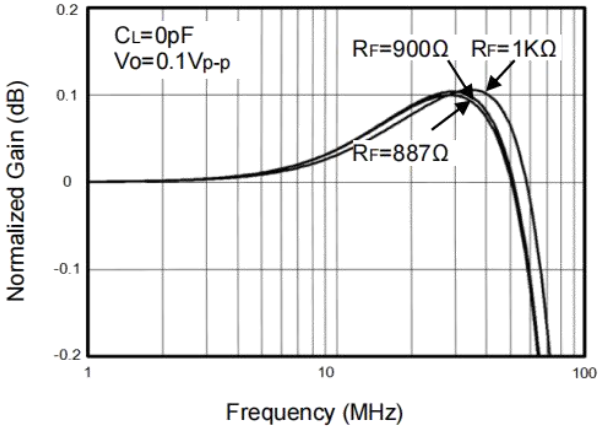

Frequency Response For Various CL

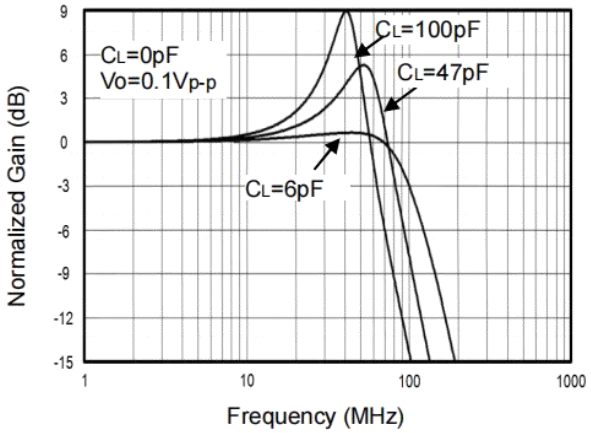

Frequency Response vs.Capacitive Load

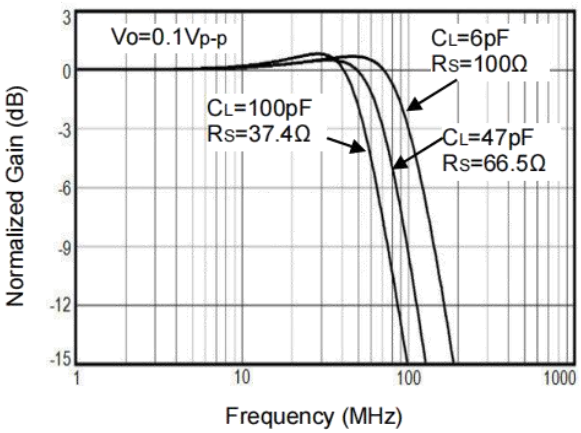

Typical Performance characteristics

(Vs=+5V,G= +2, R_F=887Ω,R_G=887Ω,and R_L=150Ωconnected to Vs/2, Typical values are at T_A =+25°C.)

Input Voltage Noise Spectral Density vs. Frequency

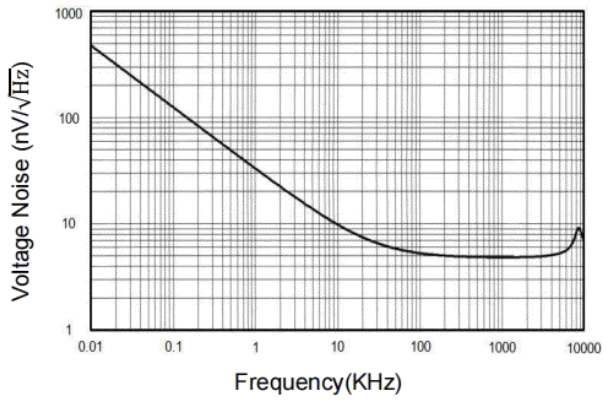

Overload Recovery Time

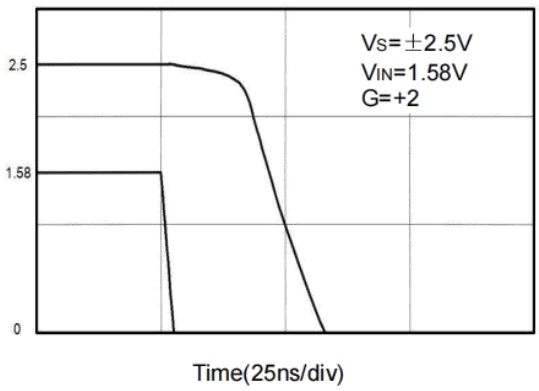

Large-Signal Disable/Enable Response

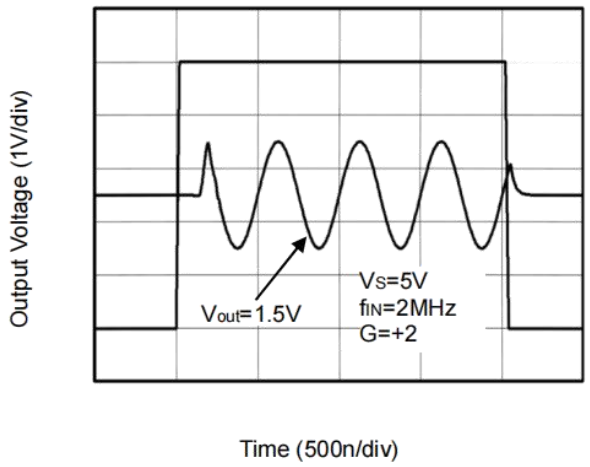

Closed-Loop Output Impedance vs Frequency

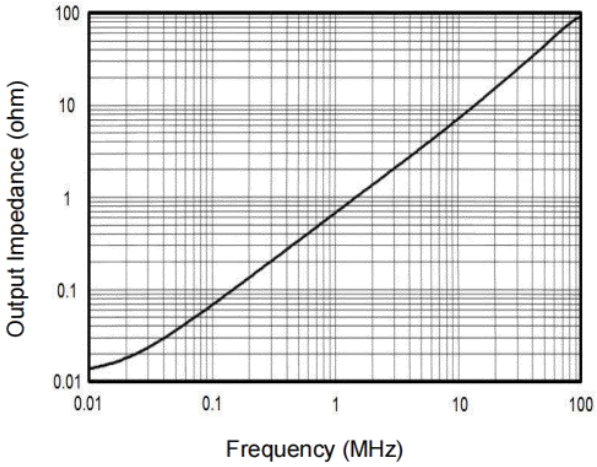

Application Note

Driving Capacitive Loads

AD805X series op amps are unity-gain stable and suitable for a wide range of general-purpose applications. The small footprints of the AD805X series packages save space on printed circuit boards and enable the design of smaller electronic products.

Power Supply Bypassing and Board Layout

AD805X series operates from a single 2.5V to 5.5V supply or dual ±1.25V to ±2.75V supplies. For best performance, a 0.1μF ceramic capacitor should be placed close to the V_{DD} pin in single supply operation. For dual supply operation, both V_{DD} and VSS supplies should be bypassed to ground with separate 0.1μF ceramic capacitors.

Low Supply Current

The low supply current (typical 2.8mA per channel) of AD805X series will help to maximize battery life. They are ideal for battery powered systems.

Operating Voltage

AD805X series operate under wide input supply voltage (2.5V to 5.5V). In addition, all temperature specifications apply from
-40°C to +125°C. Most behavior remains unchanged throughout the full operating voltage range. These guarantees ensure operation throughout the single Li-Ion battery lifetime.

Rail-to-Rail Output

Rail-to-Rail output swing provides maximum possible dynamic range at the output. This is particularly important when operating in low supply voltages. The output voltage of AD805X series can typically swing to less than 8mV from supply rail in light resistive loads (>1kΩ), and 30mV of supply rail in moderate resistive loads (150Ω).

Capacitive Load Tolerance

The AD805X family is optimized for bandwidth and speed, not for driving capacitive loads. Output capacitance will create a pole in the amplifier's feedback path, leading to excessive peaking and potential oscillation. If dealing with load capacitance is a requirement of the application, the two strategies to consider are (1) using a small resistor in series with the amplifier's output and the load capacitance and (2) reducing the bandwidth of the amplifier's feedback loop by increasing the overall noise gain. Figure 2. shows a unity gain follower using the series resistor strategy. The resistor isolates the output from the capacitance and, more importantly, creates a zero in the feedback path that compensates for the pole created by the output capacitance.

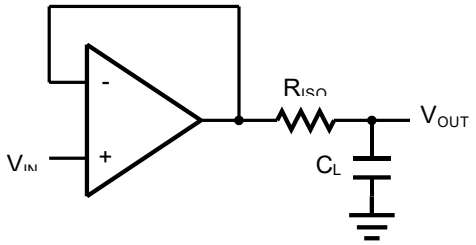

Figure 2. Indirectly Driving a Capacitive Load Using Isolation Resistor

The bigger the RISO resistor value, the more stable V_{OUT} will be. However, if there is a resistive load RL in parallel with the capacitive load, a voltage divider (proportional to RISO/RL) is formed, this will result in a gain error.

The circuit in Figure 3 is an improvement to the one in Figure 2. RF provides the DC accuracy by feed-forward the VIN to R_L. C_F and RISO serve to counteract the loss of phase margin by feeding the high frequency component of the output signal back to the amplifier's inverting input, thereby preserving the phase margin in the overall feedback loop. Capacitive drive can be increasedby increasing the value of C_F. This in turn will slow down the pulse response.

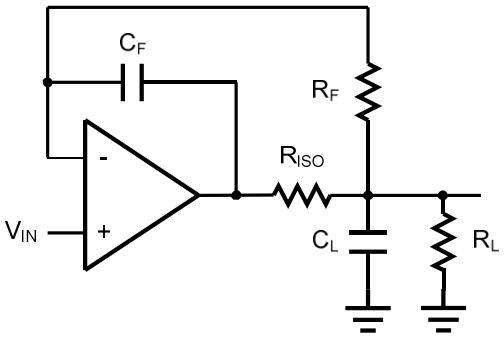

Figure 3. Indirectly Driving a Capacitive Load with DC Accuracy

Typical Application Circuits

Differential amplifier

The differential amplifier allows the subtraction of two input voltages or cancellation of a signal common the two inputs. It is useful as a computational amplifier in making a differential to single-end conversion or in rejecting a common mode signal. Figure 4. shown the differential amplifier using AD805X.

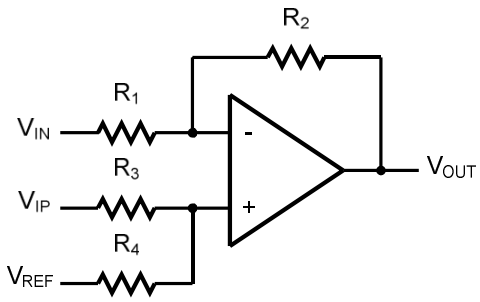

Figure 4. Differential Amplifier

$$V_{OUT}=\left(\frac{R_1+R_2}{R_3+R_4}\right)\frac{R_4}{R_1}V_{IN}-\frac{R_2}{R_1}V_{IP}+\left(\frac{R_1+R_2}{R_3+R_4}\right)\frac{R_3}{R_1}V_{REF}$$

If the resistor ratios are equal (i.e. R_1=R_3 and R_2=R_4), then

$$V_{OUT}=\frac{R_2}{R_1}(V_{IP}-V_{IN})+V_{REF}$$

Low Pass Active Filter

The low pass active filter is shown in Figure 5. The DC gain is defined by –R2/R1. The filter has a -20dB/decade roll-off after its corner frequency $f_C=1/(2\pi R3C1)$.

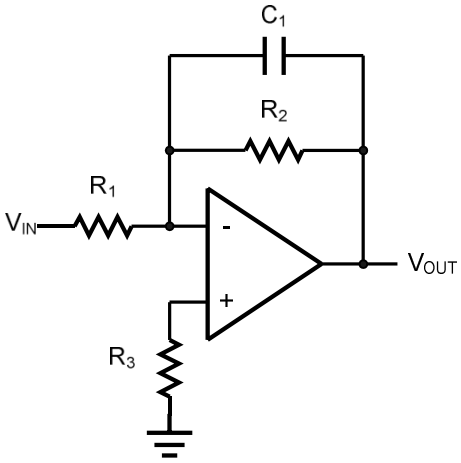

Figure 5. Low Pass Active Filter

Driving Video

The AD805X can be used in video applications like in Figure 6.

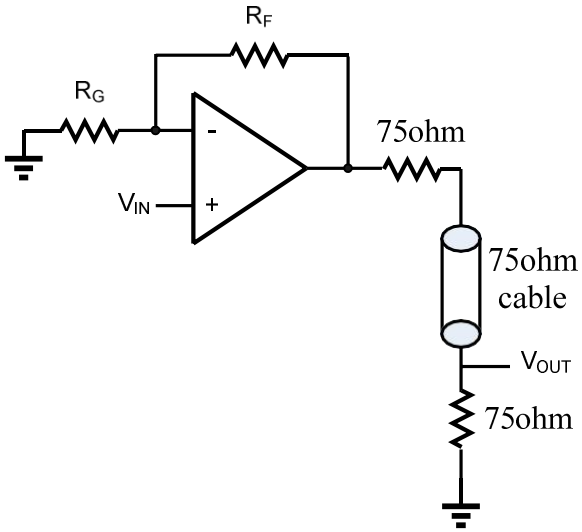

Figure 6. Typical video driving

Physical Dimensions

SOP-8

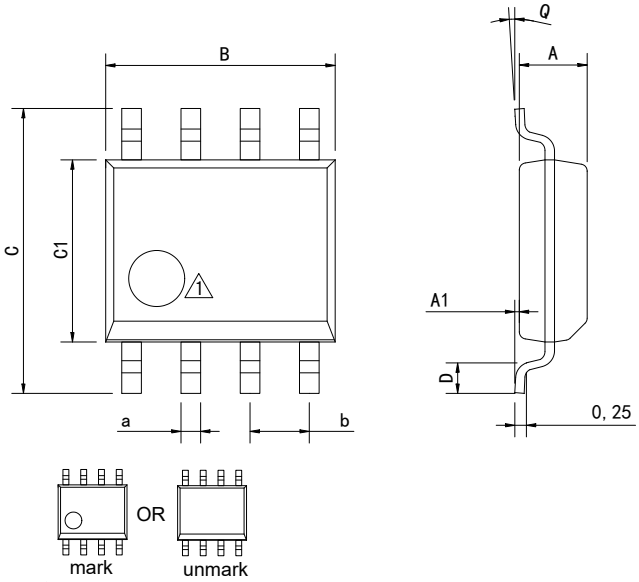

1 Package top mark may be in lower left corner or unmark

Dimensions In Millimeters(SOP-8)									
Symbol:	A	A1	B	C	C1	D	Q	a	b
Min:	1.35	0.05	4.90	5.80	3.80	0.40	0°	0.35	1.27 BSC
Max:	1.55	0.20	5.10	6.20	4.00	0.80	8°	0.45	

MSOP-8

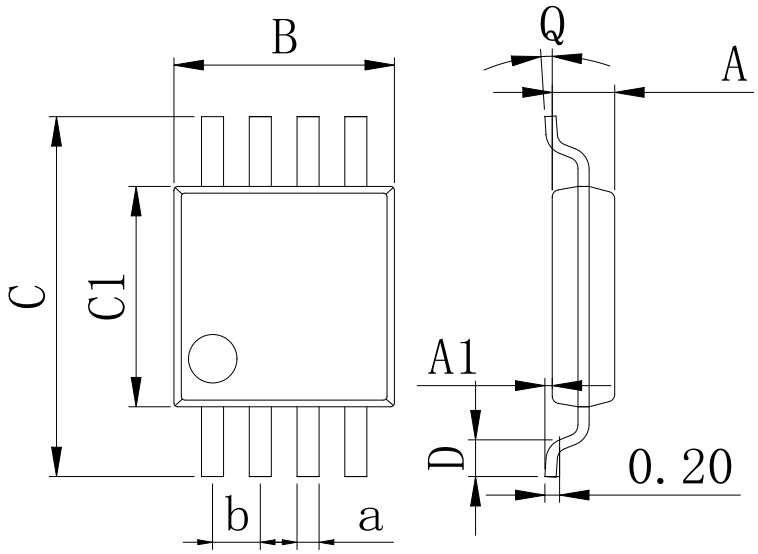

Dimensions In Millimeters(MSOP-8)									
Symbol:	A	A1	B	C	C1	D	Q	a	b
Min:	0.80	0.05	2.90	4.75	2.90	0.35	0°	0.25	0.65 BSC
Max:	0.90	0.20	3.10	5.05	3.10	0.75	8°	0.35	

Physical Dimensions

SOP-14

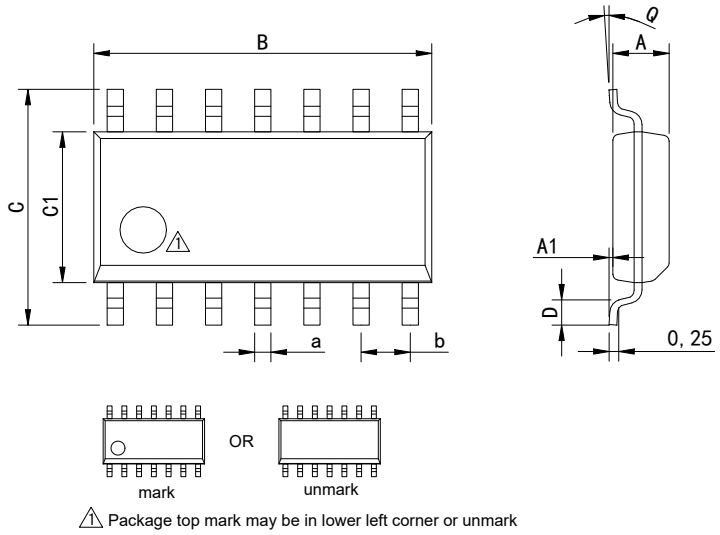

Dimensions In Millimeters(SOP-14)									
Symbol:	**A**	**A1**	**B**	**C**	**C1**	**D**	**Q**	**a**	**b**
Min:	1.35	0.05	8.55	5.80	3.80	0.40	0°	0.35	1.27 BSC
Max:	1.55	0.20	8.95	6.20	4.00	0.80	8°	0.45	

TSSOP-14

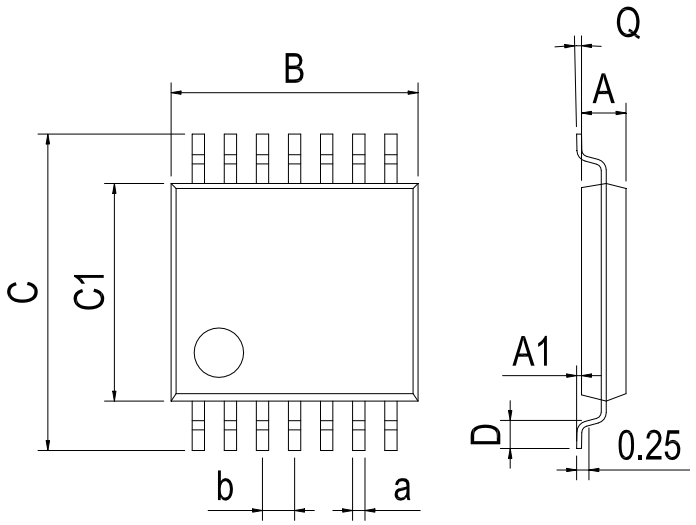

Dimensions In Millimeters(TSSOP-14)									
Symbol:	A	A1	B	C	C1	D	Q	a	b
Min:	0.85	0.05	4.90	6.20	4.30	0.40	0°	0.20	0.65 BSC
Max:	0.95	0.20	5.10	6.60	4.50	0.80	8°	0.25	

Physical Dimensions

SOT-23-5

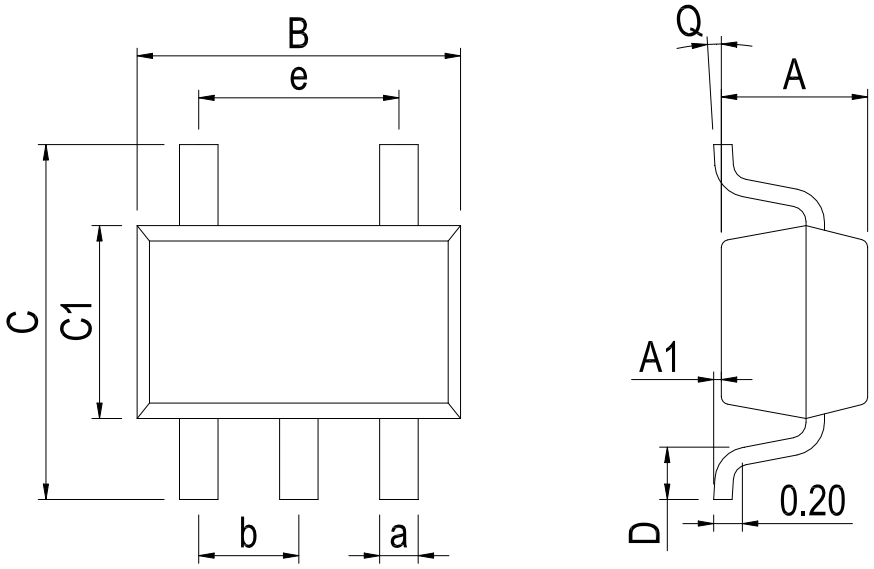

Dimensions In Millimeters(SOT23-5)										
Symbol:	A	A1	B	C	C1	D	Q	a	b	e
Min:	1.00	0.00	2.82	2.65	1.50	0.30	0°	0.30	0.95 BSC	1.90 BSC
Max:	1.15	0.15	3.02	2.95	1.70	0.60	8°	0.50		

SC70-5

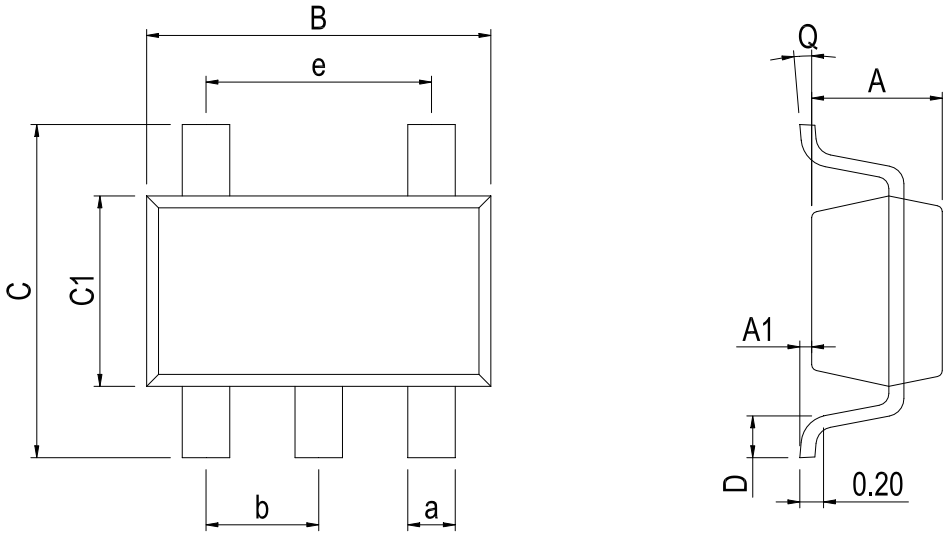

Dimensions In Millimeters(SC70-5)										
Symbol:	A	A1	B	C	C1	D	Q	a	b	e
Min:	0.90	0.00	2.00	2.15	1.15	0.26	0°	0.15	0.65 BSC	1.30 BSC
Max:	1.00	0.15	2.20	2.45	1.35	0.46	8°	0.35		

Physical Dimensions

DFN-8 2*2

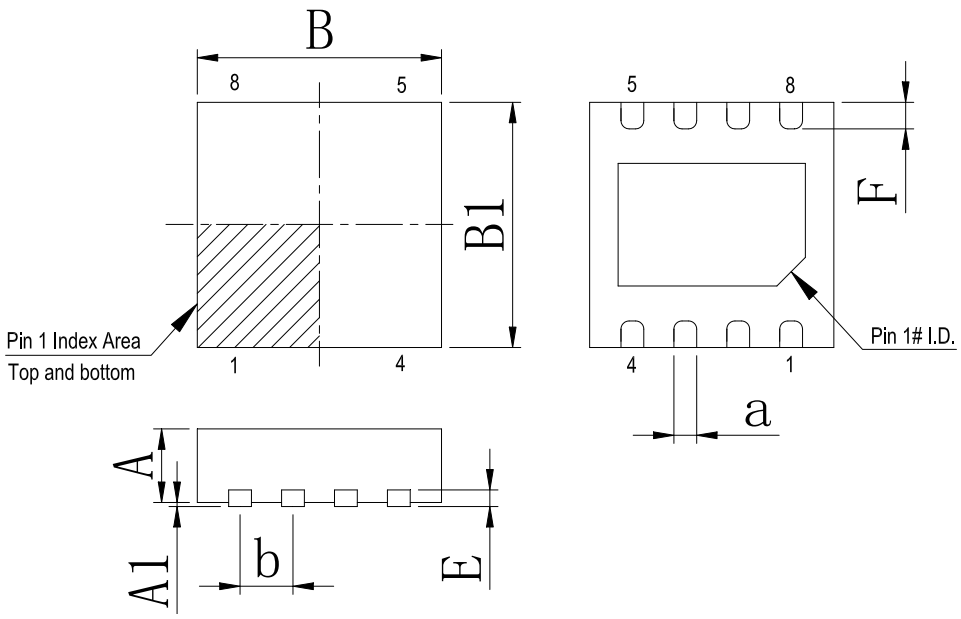

Dimensions In Millimeters(DFN-8 2*2)								
Symbol:	A	A1	B	B1	E	F	a	b
Min:	0.85	0	1.90	1.90	0.15	0.25	0.18	0.50TYP
Max:	0.95	0.05	2.10	2.10	0.25	0.45	0.30	

Revision History

REVISION NUMBER	DATE	REVISION	PAGE
V1.0	2020-6	New	1-17
V1.1	2023-10	Update encapsulation type、Update SC70-5 Physical Dimensions	1、14
V1.2	2024-11	Add a model marking name、Update SOT-23-5 Physical dimension、Update Lead Temperature	1、3、14
V1.3	2025-9	Update important statements 、 Update SOP-8 and SOP-14Dimension drawing	12、13、17

IMPORTANT STATEMENT:

Huaguan Semiconductor reserves the right to change products and services offered without prior notice. Customers should obtain the latest relevant information before placing orders and verify that such information is current and complete. Huaguan Semiconductor assumes no responsibility or liability for altered documents.

Customers are responsible for complying with safety standards and implementing safety measures when using Huaguan Semiconductor products in system design and end-product manufacturing. You assume full responsibility for: selecting the appropriate Huaguan Semiconductor products for your application; designing, validating, and testing your application; and ensuring that your application complies with applicable standards and all other safety, security, or other requirements. This is to prevent potential risks that may lead to personal injury or property damage.

Huaguan Semiconductor products are not approved for use in life support, military, aerospace, or other high-risk applications. Huaguan products are neither intended nor warranted for use in such systems or equipment. Any failure or malfunction may lead to personal injury or severe property damage. Such applications are deemed "Unsafe Use." Unsafe Use includes, but is not limited to: surgical and medical equipment, nuclear energy control equipment, aircraft or spacecraft instruments, control or operation of vehicle power, braking, or safety systems, traffic signal instruments, all types of safety devices, and any other applications intended to support or sustain life. Huaguan Semiconductor shall not be liable for consequences resulting from Unsafe Use in these fields. Users must independently evaluate and assume all risks. Any issues, liabilities, or losses arising from the use of products beyond their approved applications shall be solely borne by the user. Users may not claim any compensation from Huaguan Semiconductor based on these terms. If any third party claims against Huaguan Semiconductor due to such Unsafe Use, the user shall compensate Huaguan Semiconductor for all resulting damages and liabilities.

Huaguan Semiconductor provides technical and reliability data (including datasheets), design resources (including reference designs), application or other design advice, web tools, safety information, and other resources for its semiconductor products. However, no guarantee is made that these resources are free from defects, and no express or implied warranties are provided. The use of testing and other quality control techniques is limited to Huaguan Semiconductor's quality assurance scope. Not all parameters of each device are tested.

Huaguan Semiconductor's documentation authorizes you to use these resources only for developing applications related to the products described herein. You are not granted rights to any other intellectual property of Huaguan Semiconductor or any third party. Any other reproduction or display of these resources is strictly prohibited. You shall fully indemnify Huaguan Semiconductor and its agents against any claims, damages, costs, losses, and liabilities arising from your use of these resources. Huaguan Semiconductor shall not be held responsible.