REV.	DESCRIPTION	ECN NO.	NAME	DATE

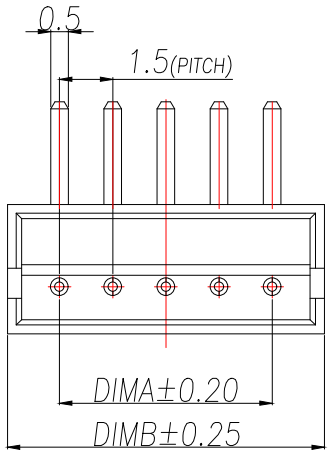

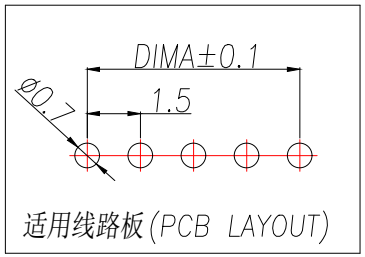

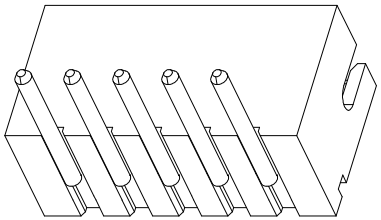

Part No	CKT	A	B
WF-ZH1.5-2PB1	2	1.5	4.5
WF-ZH1.5-3PB1	3	3.0	6.0
WF-ZH1.5-4PB1	4	4.5	7.5
WF-ZH1.5-5PB1	5	6.0	9.0
WF-ZH1.5-6PB1	6	7.5	10.5
WF-ZH1.5-7PB1	7	9.0	12.0
WF-ZH1.5-8PB1	8	10.5	13.5
WF-ZH1.5-9PB1	9	12.0	15.0
WF-ZH1.5-10PB1	10	13.5	16.5
WF-ZH1.5-11PB1	11	15.0	18.0
WF-ZH1.5-12PB1	12	16.5	19.5
WF-ZH1.5-13PB1	13	18.0	21.0
WF-ZH1.5-14PB1	14	19.5	22.5
WF-ZH1.5-15PB1	15	21.0	24.0
WF-ZH1.5-16PB1	16	22.5	25.5
WF-ZH1.5-17PB1	17	24.0	27.0
WF-ZH1.5-18PB1	18	25.5	28.5
WF-ZH1.5-19PB1	19	27.0	30.0
WF-ZH1.5-20PB1	20	28.5	31.5

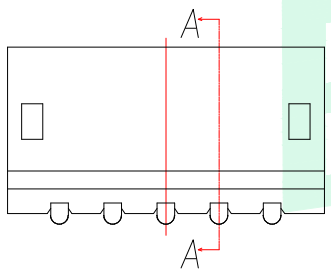

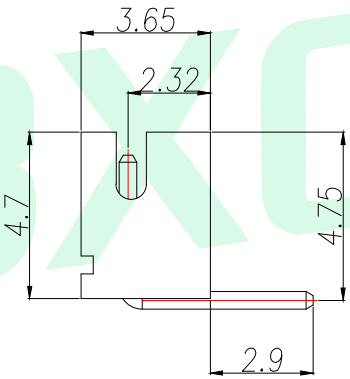

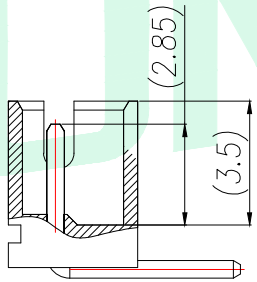

SECTION A-A

序号	品名	材质
1	ZH1.5弯针WTB胶芯	LCP UL94V-0 本色
2	ZH1.5弯针WTB端子	铜合金/表面镀锡

技术指标(Technical Index):

1.温度范围(Temperature range):-25°C~+85°C.
2.额定电压(Rated voltage):100V,AC.
3.额定电流(Rated current):1.0A AC,DC.
4.接触电阻(Contact resistance):≤20mΩ .
5.绝缘电阻(Insulation resistance):≥500MΩ.
6.耐压值(Withstanding voltage):500V AC/minute.

GENERAL TOLERANCE	DONGGUAN BAOXUN PRECISION TECHNOLOGY CO., LTD					BXCONN®
DIM. TOL. x. ±0.50 x.x ±0.20 x.xx ±0.10 GENERAL ANGLE: x.° ±1°	TITLE: ZH1.5弯针WTB					
	DWG. NO.: WF-ZH1.5-XPB1				CHECKED: MAX	
	PART NO.: WF-ZH1.5-XPB1				DRAWN: ELLA	
	UNIT: mm	SCALE: none	SHEET: 1of 1	DWG. SIZE: A4	LAYER: bxconn	APPROVED: WILL

REV.	DESCRIPTION	ECN NO.	NAME	DATE

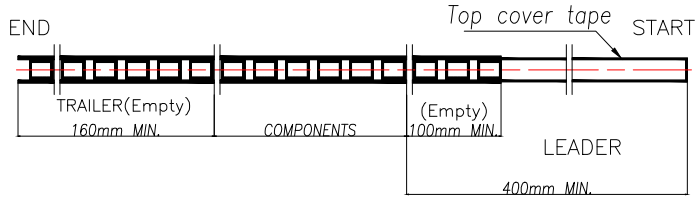

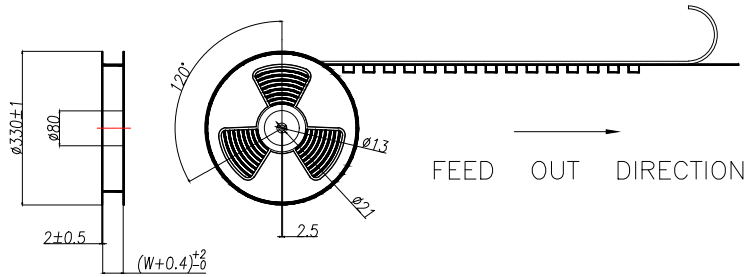

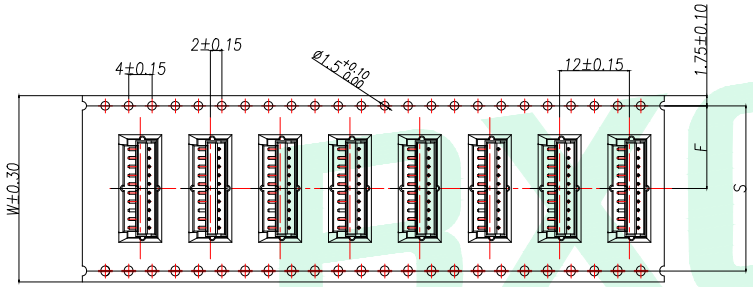

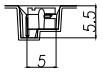

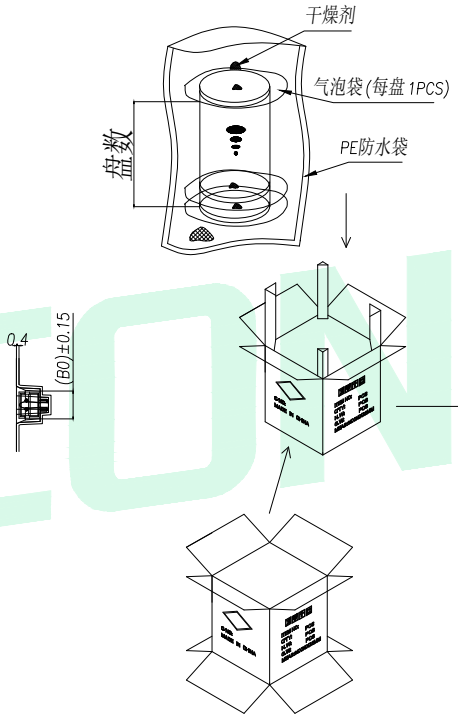

NOTE(注):
1.10 SPROCKET HOLE PITCH CUMULATIVE TOLERANCE ±0.2mm.
(10片孔距累积公差±0.2mm.)
2.CARRIER CAMBER NOT TO EXCEED 1mm IN 100mm.
(载带拱/弧形MAX:1/100mm.)
3.ALL DIMENSIONS MEET EIA-481 REQUIREMENTS.
(所有的尺寸要满足协会EIA-481规范.)
4.MATTRIAL:CLEAR ANTISTATIC PS,COLD SEALING.
(载带材料:透明抗静电 PS,冷封.)
5.THICKNESS:0.50±0.05mm.(载带厚度:0.40±0.05mm.)
6.PACKING LENGHT PER REEL: 12.48 METERS.(每卷包装长度:12.48米.)
7.COMPONENT LOAD PER REEL:1000 PCS.(每卷包装数量:1000只,前后各空20只.)
8.纸箱装箱以不超过装箱线为准,空余位置用塑料泡沫及保尼龙填充.
9.纸箱分小、中、标准型3种规格型号:装箱为整箱(左下包装量)采用标准型纸箱包装,未达到整箱数量以产品量适当采用小型或中型纸箱包装.

纸箱型号 Carton Type	小型 Small Size	中型 Medium	标准型 Standard
高度 Hight (CM)	7.5	15	32

CKT (1.5mm pitch)	W	PCS/RELL	RELL/CARTON	SUM(PCS)
2				
3	16	700	14	9800
4				
5				
6				
7	24	700	10	7000
8				
9				
10				
11				
12	32	700	8	5600
13				
14				
15				
16				
17	44	700	6	4200
18				
19				
20				

CKT (1.5mm pitch)	B0	W	F	S
2	4.80			
3	6.30	16	7.50	
4	7.80			
5	9.30			
6	10.80			
7	12.30	24	11.50	
8	13.80			
9	15.30			
10	16.80			
11	18.30			
12	19.80	32	14.20±0.10	28.40
13	21.30			
14	22.80			
15	24.30			
16	25.80			
17	27.30	44	20.20±0.10	40.40
18	28.80			
19	30.30			
20	31.80			

GENERAL TOLERANCE

DIM.	TOL.
x.	±0.50
x.x	±0.25
x.xx	±0.15
GENERAL ANGLE:	
X.°	±2°

DONGGUAN BAOXUN PRECISION TECHNOLOGY CO., LTD

BXCONN®

TITLE: ZH1.5弯针WTB载带包装

DWG. NO.: WF-ZH1.5-XPB1 | CHECKED: MAX

PART NO.: WF-ZH1.5-XPB1 | DRAWN: ELLA

UNIT:	SCALE:	SHEET:	DWG. SIZE:	LAYER:	APPROVED:
mm	none	1of 1	A4	bxconn	WILL