REV.	DESCRIPTION	ECN NO.	NAME	DATE

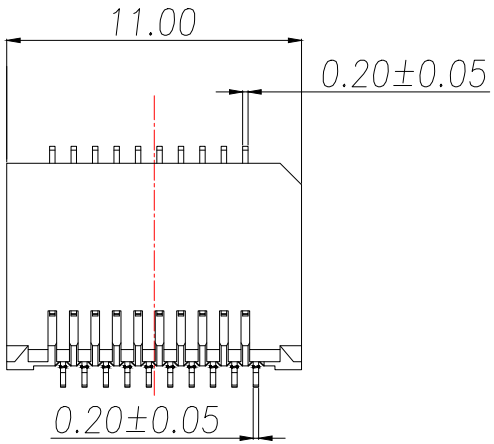

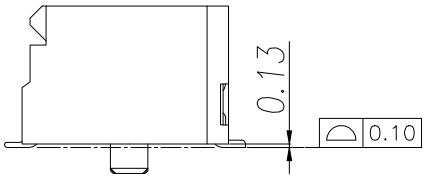

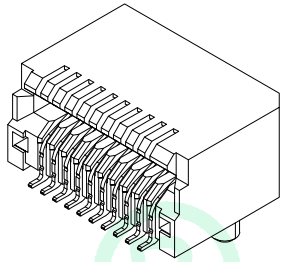

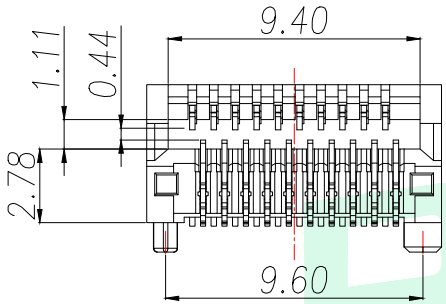

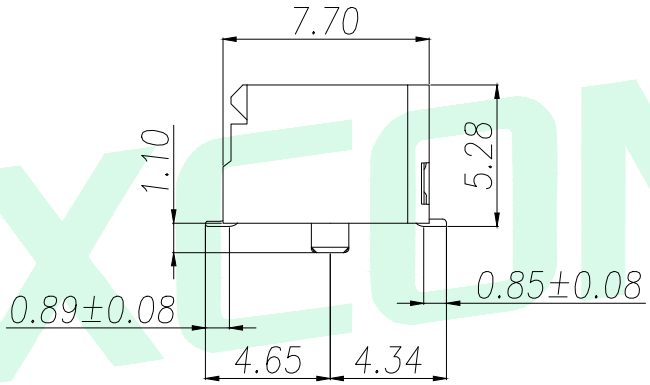

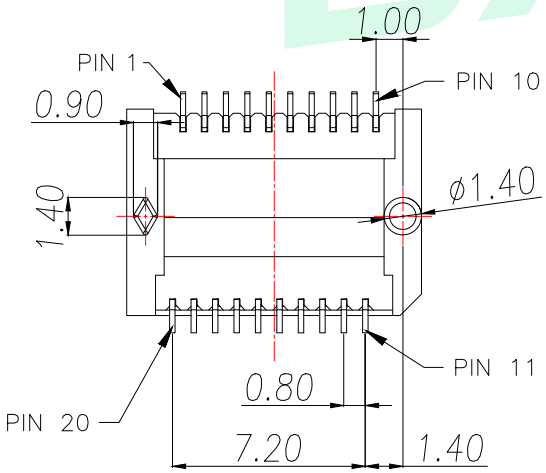

NOTES:
1.MATERIAL
HOUSING:HIGH TEMPERATURE LCP, Black,UL94 V-0

2.CONTACTS:PHOSPHOR BRONZE
PLATING :15μ"GOLD ON MATING AREA,
GOLD FLASH PLATING ON
SOLDER TAILS, 50μ"NICKEL
UNDERPLATING OVERALL.

3.MECHANICAL REQUIREMENT:
3.1 DURABILITY:100 CYCLES NIN.
3.2 INSERTION AND EXTRACTION FORCE:40N MAX.& 11.5N MAX

4.ENVIRONMENTAL:
4.1 CONTACT RESISTANCE:20 MILLIOHMS MAXINITIAL.
4.2 DIELECTRIC WITHSTANDING VOLTAGE: 300V AC/MIN
4.3 CURRENT RATING:0.5 Amps Max.
4.4 OPERATION:-40°C TO +95C
4.5 STORAGE:-55°C TO +105°C
4.6 REFLOW SOLDERING TEMPERATURE:255~265°MAXLIMUMFOR 5~10 SECONDS
4.9 ROHS COMPLIANT

5.PACKAGING:TAPE AND REEL

GENERAL TOLERANCE	DONGGUAN BAOXUN PRECISION TECHNOLOGY CO., LTD						BXCONN®
DIM. TOL. x. ±0.30 x.x ±0.25 x.xx ±0.15 GENERAL ANGLE: x.° ±5° x.x° ±1°	TITLE: SFP+ 1X1CONNECTOR						
	DWG. NO.: SFP-15U-P20					CHECKED: MAX	
	PART NO.: SFP-15U-P20					DRAWN: ELLA	
	UNIT: mm	SCALE: none	SHEET: 1of 1	DWG. SIZE: A4	LAYER: bxconn	APPROVED: WILL	

REV.	DESCRIPTION	ECN NO.	NAME	DATE

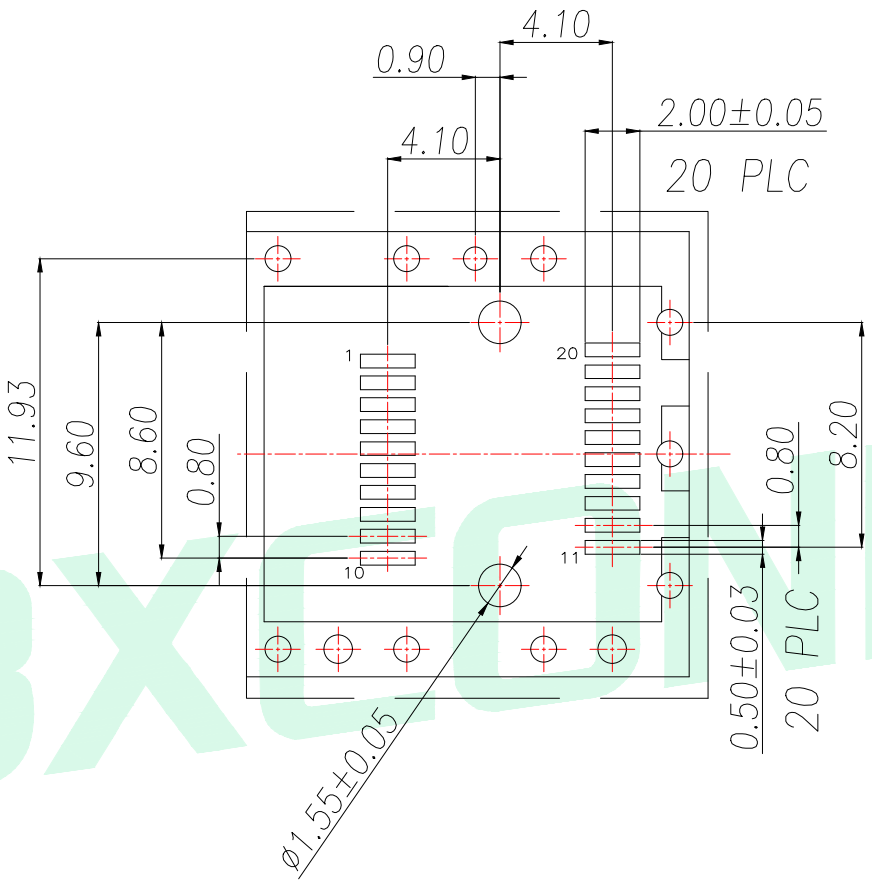

PCB.WELDING DRAWING (TOLERANCE:±0.05)

GENERAL TOLERANCE	DONGGUAN BAOXUN PRECISION TECHNOLOGY CO., LTD					BXCONN®
DIM. TOL. x. ±0.30 x.x ±0.25 x.xx ±0.15 GENERAL ANGLE: x.° ±5° x.x° ±1°	TITLE: SFP+ 1X1CONNECTOR					
	DWG. NO.: SFP-15U-P20				CHECKED: MAX	
	PART NO.: SFP-15U-P20				DRAWN: ELLA	
	UNIT: mm	SCALE: none	SHEET: 1of 1	DWG. SIZE: A4	LAYER: bxconn	APPROVED: WILL

BXCONN®

REV.	DESCRIPTION	ECN NO.	NAME	DATE

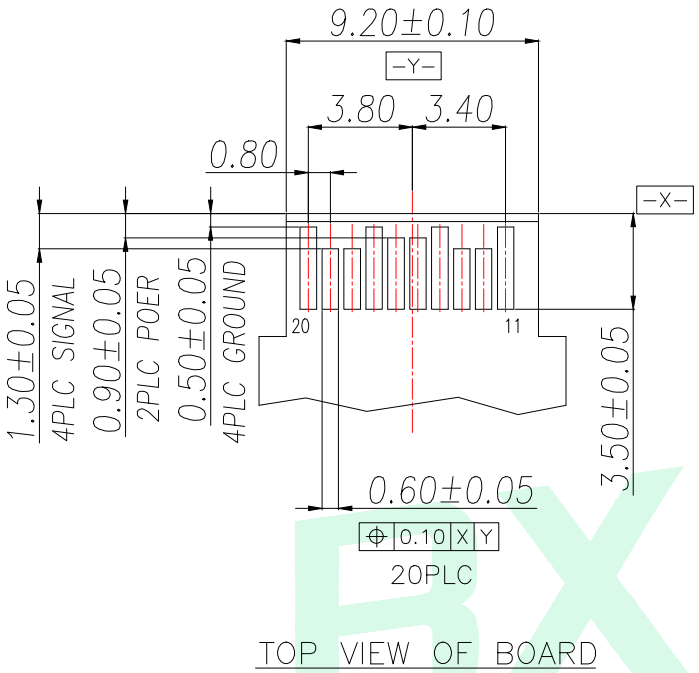

TOP VIEW OF BOARD

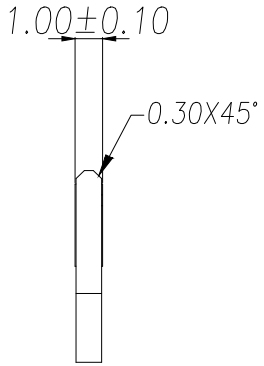

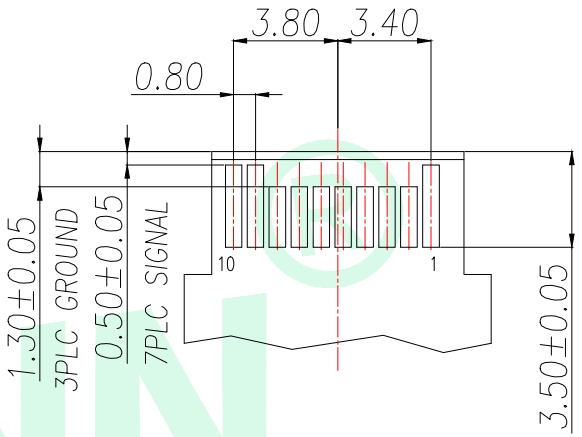

BOTTOM VIEW OF BOARD

RECOMMENDED LAYOUT DETAIL MATING TRANSCEIVER PCB

GENERAL TOLERANCE DIM. TOL. x. ±0.30 x.x ±0.25 x.xx ±0.15 GENERAL ANGLE: x.° ±5° x.x° ±1°	DONGGUAN BAOXUN PRECISION TECHNOLOGY CO., LTD					BXCONN®
	TITLE: SFP+ 1X1CONNECTOR					
	DWG. NO.: SFP-15U-P20				CHECKED: MAX	
	PART NO.: SFP-15U-P20				DRAWN: ELLA	
	UNIT: mm	SCALE: none	SHEET: 1of 1	DWG. SIZE: A4	LAYER: bxconn	APPROVED: WILL