WWW.XYECONN.COM

REV.	Q'TY	ECN. NO.	APR.	DATE

NOTE:
1.MATERIAL:
1.1 INSULATOR: HIGH TEMPERATURE PLASTIC UL 94V-0;
1.2 CONTACT: COPPER ALLOY
1.3 SHELL:STAINLESS STEEL
2.ELECTRICAL CHARACTERISTICS;
2.1 CONTACT RESISTANCE: 40mΩ Max FOR INITIAL. 30mΩ CHANGE AFTER TEST. MEASURE AT 20mV, 100mA.
2.2 CONTACT CURRENT RATING: 5A FOR VBUS PIN; 1.25A FOR VCONN PIN.
2.3 DIELECTRIC WITHSTANDING VOLTAGE: 100V AC R.M.S.
2.4 INSULATION RESISTANCE 100MΩ Min
2.5 OPERATING TEMPERATURE: -40°C ~ 85°C
3 MECHANICAL CHARACTERISTICS:
3.1 MATING FORCE: 5~20 N.
3.2 UNMATED FORCE: 8~20N AFTER TEST
3.3 DURABILITY: 10,000 CYCLES
4.PLATING
4.1 TERMINAL CONTACT: (SEE TAB) GOLD PLATING ALL OVER 50u" Min NICKEL AND 80u"Min Tin ALL OVER 50u" Min NICKEL ON SOLDER AREA
4.2 SHELL: 50u" Min. NICKEL ALL OVER,
5.TID 5719
6.* *Focus on size control

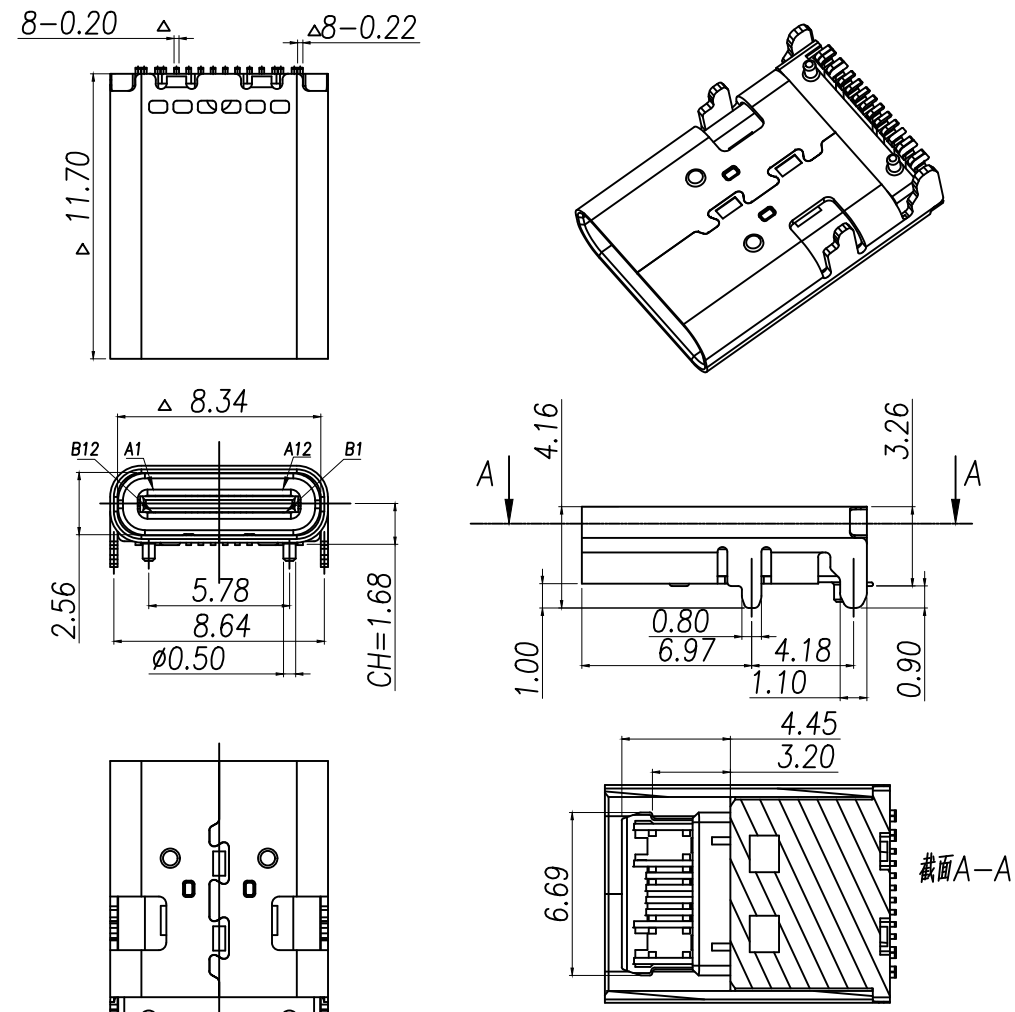

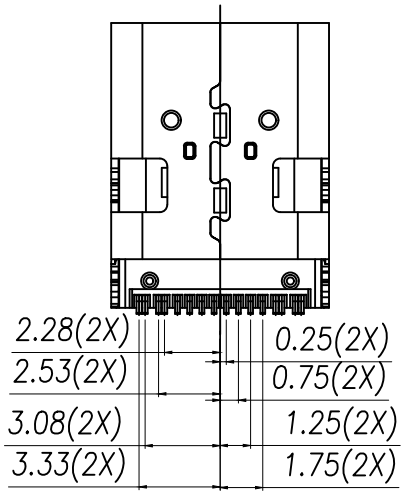

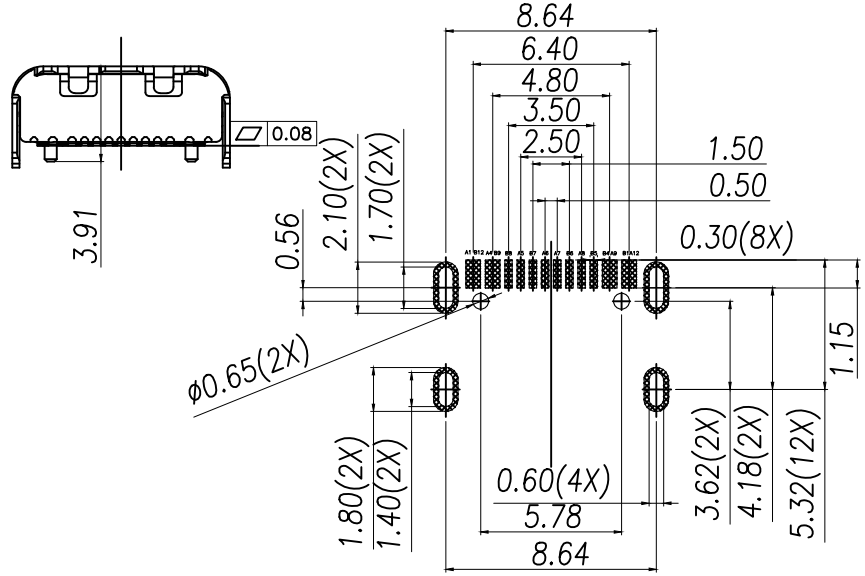

RECOMMENDED P.C.B LAYOUT

USB TYPE-C PIN ASSIGNMENTS

PIN NUMBER	SIGNAL NAME	PIN NUMBER	SIGNAL NAME
A1	GND	B12	GND
A4	VBUS	B9	VBUS
A5	CC1	B8	SBU2
A6	Dp1	B7	Dn2
A7	Dn1	B6	Dp2
A8	SBU1	B5	CC2
A9	VBUS	B4	VBUS
A12	GND	B1	GND

DIMENSION IN mm	
TOLERANCE UNLESS OTHERWISE SPECIFIED	
.X±0.35	X.°± 5°
.XX±0.25	.X°± 3°
.XXX±0.15	.XX°± 1°

厦门市辛译精密电子有限公司
Xiamen XinYi Xyeconn Electronics Co.,Ltd

APR.	Alex
CHK.	Jack
DRA.	Can
TITLE:	TYPE C 板上单排16PIN L=11.70MM无弹片
DWG NO.	XY-MC-121-L11.9 16P
PROJ.	CUSTOMER DRAWING
SIZE	A4
SCALE	1:1
SHEET	1/1
REV.	A

F-RD-18A