ROHS Compliant

MAPX	MODIFICATION	DATE	DRAW	APPROVE

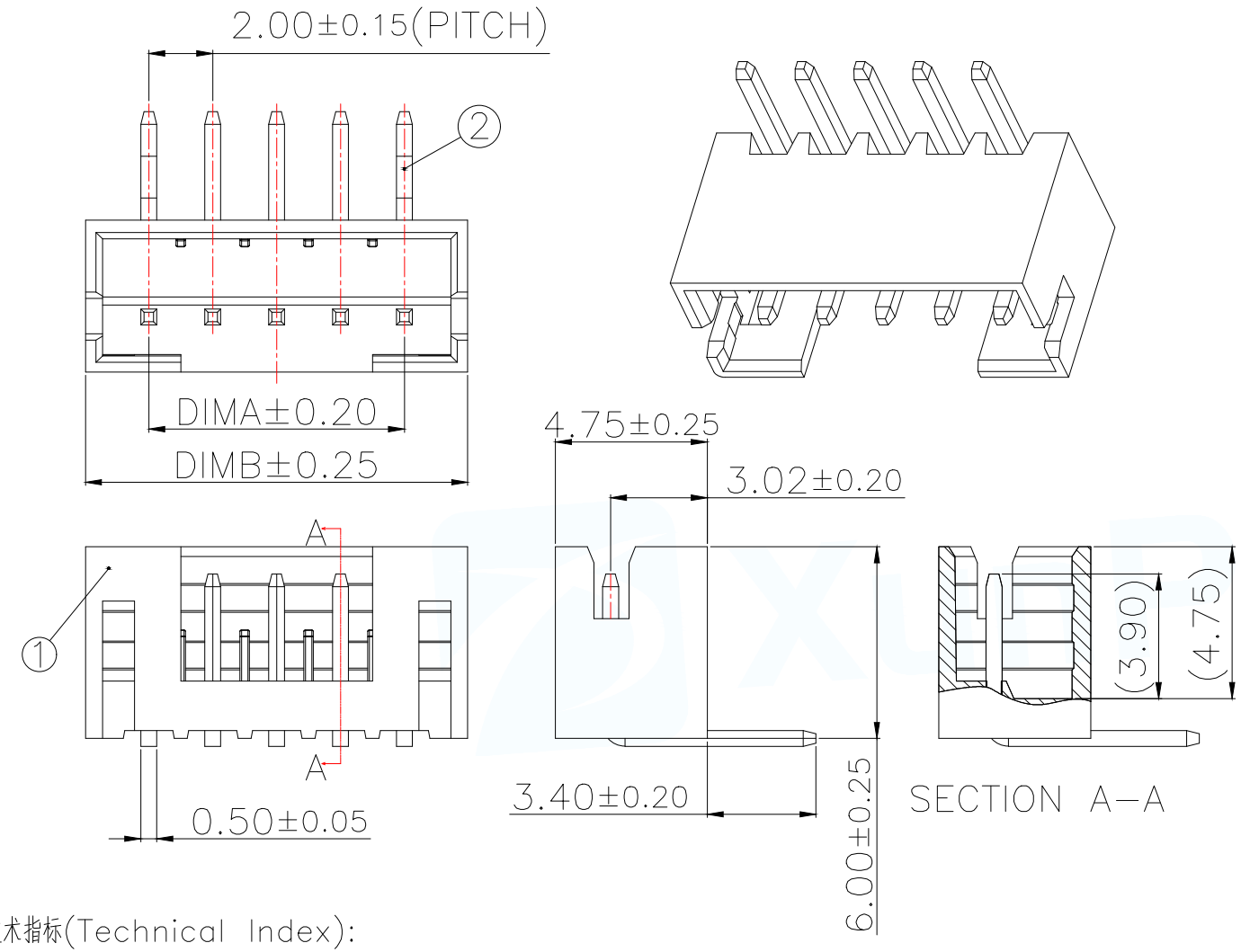

Part No	CKT	A	B
PH2.0-2PWZ-MR	2	2.0	6.0
PH2.0-3PWZ-MR	3	4.0	8.0
PH2.0-4PWZ-MR	4	6.0	10.0
PH2.0-5PWZ-MR	5	8.0	12.0
PH2.0-6PWZ-MR	6	10.0	14.0
PH2.0-7PWZ-MR	7	12.0	16.0
PH2.0-8PWZ-MR	8	14.0	18.0
PH2.0-9PWZ-MR	9	16.0	20.0
PH2.0-10PWZ-MR	10	18.0	22.0
PH2.0-11PWZ-MR	11	20.0	24.0
PH2.0-12PWZ-MR	12	22.0	26.0
PH2.0-13PWZ-MR	13	24.0	28.0
PH2.0-14PWZ-MR	14	26.0	30.0
PH2.0-15PWZ-MR	15	28.0	32.0
PH2.0-16PWZ-MR	16	30.0	34.0
PH2.0-17PWZ-MR	17	32.0	36.0
PH2.0-18PWZ-MR	18	34.0	38.0
PH2.0-19PWZ-MR	19	36.0	40.0
PH2.0-20PWZ-MR	20	38.0	42.0

技术指标(Technical Index):

1.工作温度(Temperature range):-40°C~125°C.
2.额定电压(Rated voltage):200V DC/AC(rms).
3.额定电流(Rated current):2.0A.
4.接触电阻(Contact resistance):≤25mΩ.
5.耐压值(Withstanding voltage):500V AC/minute.
6.绝缘电阻(Insulation resistance):≥1000MΩ.

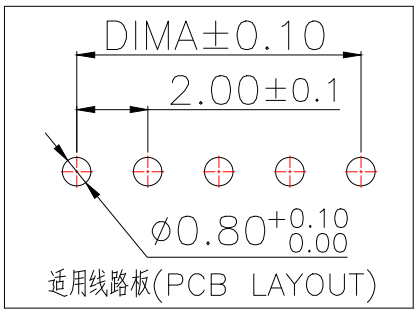

适用线路板(PCB LAYOUT)

序号	品名	材质
①	PH2.0弯针WTB胶芯	LCP UL94V-0 本色
②	PH2.0弯针WTB端子	铜合金/表面镀锡

MANUFACTURE DWG	东莞市讯普电子科技有限公司 DongGuan XunPu Electronics Co,Ltd		
UNLESS OTHERWISE SPECIFED TOLERANCES		TITLE: PH2.0弯针WTB	
		PAR	PH2.0-NPWZ-MR
DECIMALS: / ANGLES:		DWN	Lucas
X.:±0.50 / ±1°		CHKD	Ethan
X.X:±0.20		APVD	Jacob
X.XX:±0.10	CUSTOMER COPY	SCALE1:1	UNIT:MM
		SIZE:A4	SHEET:1F1 REV:A

ROHS Compliant

MAPX	MODIFICATION	DATE	DRAW	APPROVE

NOTE(注):

1.10 SPROCKET HOLE PITCH CUMULATIVE TOLERANCE ±0.2mm.
(10片孔距累积公差±0.2mm.)
2.CARRIER CAMBER NOT TO EXCEED 1mm IN 100mm.
(载带拱/弧形MAX:1/100mm.)
3.ALL DIMENSIONS MEET EIA-481 REQUIREMENTS.
(所有的尺寸要满足协会EIA-481规范.)
4.MATTRIAL:CLEAR ANTISTATIC PS,COLD SEALING.
(载带材料:透明抗静电 PS,冷封.)
5.THICKNESS:0.50±0.05mm.(载带厚度:0.50±0.05mm.)
6.PACKING LENGHT PER REEL: 7.68 METERS.(每卷包装长度:7.68米.)
7.COMPONENT LOAD PER REEL:600 PCS.(每卷包装数量:600只,前后各空20只.)
8.纸箱装箱以不超过装箱线为准,空余位置用塑料泡沫及保尼龙填充.
9.纸箱分小、中、标准型3种规格型号:装箱为整箱(左下包装量)采用标准型纸箱包装,未达到整箱数量以产品量适当采用小型或中型纸箱包装.

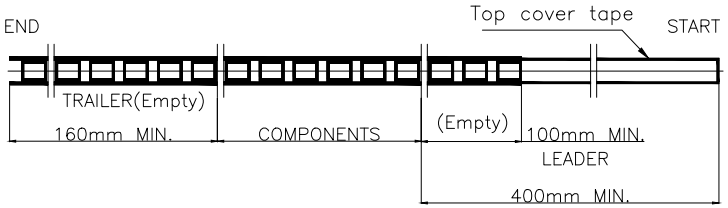

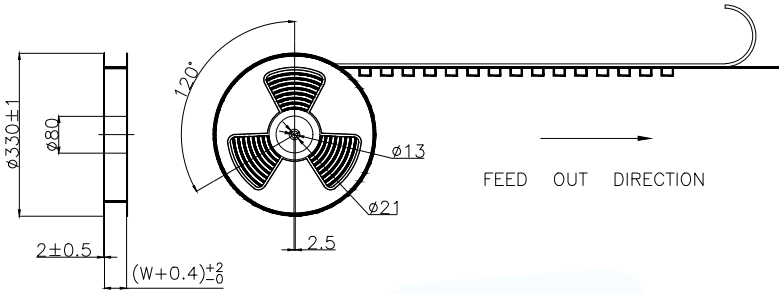

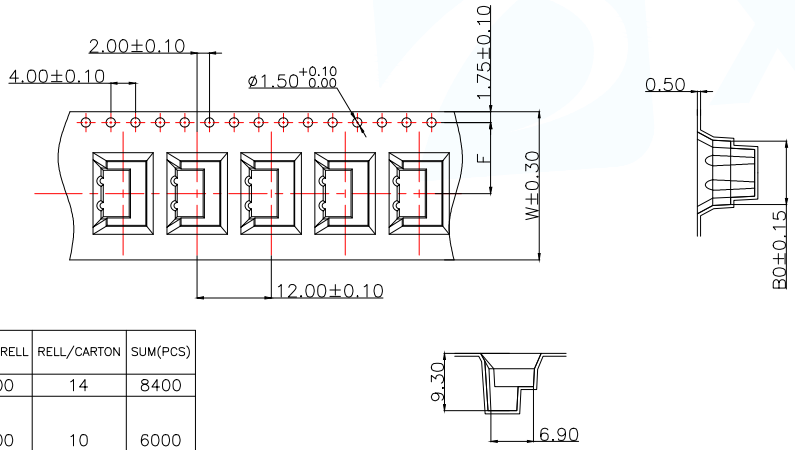

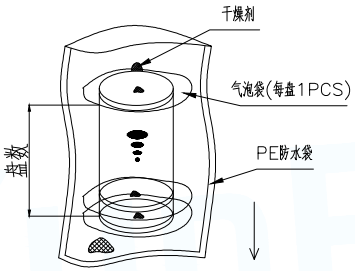

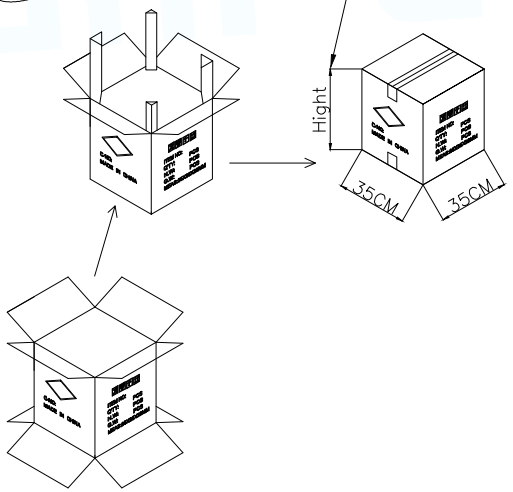

纸箱型号 Carton Type	小型 Small Size	中型 Medium	标准型 Standard
高度 Hight (CM)	7.5	15	32

CKT (2.0mm pitch)	B0	W	F	S
2	6.30	16	7.50	
3	8.30	24	11.50	
4	10.30			
5	12.30			
6	14.30			
7	16.30	32	14.20±0.10	28.40
8	18.30			
9	20.30			
10	22.30	44	20.20±0.10	40.40
11	24.30			
12	26.30			
13	28.30			
14	30.30			
15	32.30			
16	34.30	56	26.20±0.10	52.40
17	36.30			
18	38.30			
19	40.30			
20	42.30			

CKT (2.0mm pitch)	W	PCS/RELL	RELL/CARTON	SUM(PCS)
2	16	600	14	8400
3	24	600	10	6000
4				
5				
6				
7	32	600	8	4800
8				
9				
10	44	600	6	3600
11				
12				
13				
14				
15				
16	56	600	5	3000
17				
18				
19				
20				

MANUFACTURE DWG

UNLESS OTHERWISE SPECIFED TOLERANCES

DECIMALS:	ANGLES:
X.:±0.50	±2°
X.X:±0.25	
X.XX:±0.15	

东莞市讯普电子科技有限公司
DongGuan XunPu Electronics Co,Ltd

CUSTOMER COPY

TITLE:
PH2.0弯针WTB载带包装

PAR	PH2.0-NPWZ-MR	
DWN	Lucas	
CHKD	Ethan	
APVD	Jacob	
SCALE1:1	UNIT:MM	
SIZE:A4	SHEET:1F1	REV:A