TPBSC109N10NS3G
N-Channel Enhancement MOSFET

WWW.TECHPUBLIC.COM

Product Summary

- V_{DS} 100 V
- I_{DS} (at V_{GS}=10V) 60A
- $R_{DS\ (ON)}$ (at V_{GS}=10V) ≤6.5mΩ (TYP)

Application

- Load switch
- High Frequency Switching and Synchronous Rectification
- Active Clamp in Intermediate
- DC/DC Power Supplies

Package and Pin Configuration

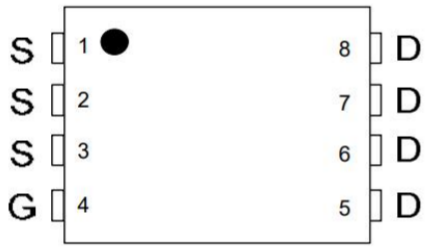

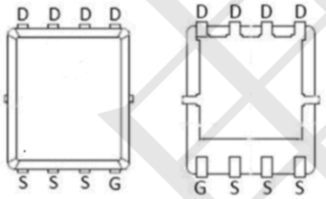

PDFN5X6-8

Circuit diagram

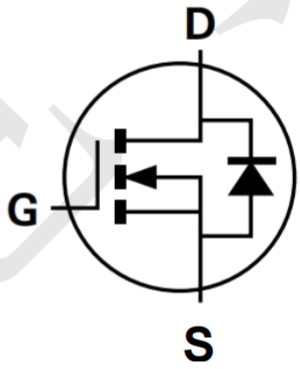

Absolute Maximum Ratings

(T_A=25℃unless otherwise noted)

PARAMETER		SYMBOL	LIMIT	UNIT
Drain-Source Voltage		V_{DS}	100	V
Gate-Source Voltage		V_{GS}	±20	V
Continuous Drain Current	T_C=25℃	I_D	60	A
	T_C=100℃		52	
Pulsed Drain Current		I_{DM}	105	A
Single Pulse Avalanche Energy		EAS	56	mJ
Total Power Dissipation	T_C=25℃	P_{DTOT}	57	W
Operating Junction Temperature Range		T_J	-55 to +150	℃
Storage Temperature Range		T_{stg}	-55 to +150	℃

Thermal Characteristic

PARAMETER		Symbol	Value	Unit
Junction-to-Ambient Thermal Resistance	PCB Mount (Note)	$R_{\theta JA}$	62	°C/W
Thermal Resistance Junction-Case		$R_{\theta JC}$	2.2	°C/W

Note : The data tested by surface mounted on a 1 inch2 FR-4 board with 2OZ copper.

Electrical Characteristics (T_A=25℃unless otherwise noted)

PARAMETER	CONDITIONS	SYMBOL	MIN	TYP	MAX	UNIT
Static						
Drain-Source Breakdown Voltage	V_{GS}=0V, I_D=250uA	BV_{DSS}	100	--	--	V
Gate-Source Threshold Voltage	V_{DS}=V_{GS}, I_D= 250μA	$V_{GS(th)}$	2.0	3.0	4.0	V
Gate-Source Leakage	V_{DS}=0V, V_{GS}= ±20V	I_{GSS}	--	--	±100	nA
Zero Gate Voltage Drain Current	V_{DS}= 80V, V_{GS}=0V	I_{DSS}	--	0.1	1.0	μA
	V_{DS}=80V, T_J=55°C		--	1.0	5.0	μA
Drain-Source On-State Resistance (Note 1)	V_{GS}= 10V, I_D= 15A	R_{DS}(on)	--	6.5	11	mΩ
	V_{GS}= 4.5V, I_D= 8A		--	10	25	
Forward Transconductance (Note 2)	V_{DS}= 5V, I_D= 20A	g_{fs}	--	75	--	S
Dynamic (Note 2)						
Total Gate Charge (Note 3)	V_{DS} = 50V, I_D = 20A, V_{GS} = 10V	Q_g	--	40	--	nC
Gate-Source Charge (Note 3)		Q_{gs}	--	7.2	--	
Gate-Drain Charge (Note 3)		Q_{gd}	--	6.5	--	
Input Capacitance	V_{DS} = 50V, V_{GS} = 0V, F= 1.0MHz	C_{iss}	--	2860	--	pF
Output Capacitance		C_{oss}	--	410	--	
Reverse Transfer Capacitance		C_{rss}	--	38	--	
Switching						
Turn-On Delay Time (Note 3)	V_{DD} =30V, I_D= 1A, V_{GS} = 10V, R_G = 3.3Ω	$t_{d(on)}$	--	8.3	--	nS
Rise Time (Note 3)		t_r	--	4.2	--	
Turn-Off Delay Time (Note 3)		$t_{d(off)}$	--	36	--	
Fall Time (Note 3)		t_f	--	6.9	--	
Source-Drain Diode Ratings and Characteristics (Note 2)						
Forward Voltage	V_{GS} = 0V, I_F = 10A	V_{SD}	--	0.7	1.2	V
Continuous Source Current	Integral reverse diode in the MOSFET	I_S	--	--	60	A
Pulsed Current (Note 1)		I_{SM}	--	--	105	A

Notes:

1. Pulse test; pulse width ≤ 300 μS, duty cycle ≤ 2%.
2. Guaranteed by design, not subject to production testing.
3. Independent of operating temperature

Typical Electrical and Thermal Characteristics

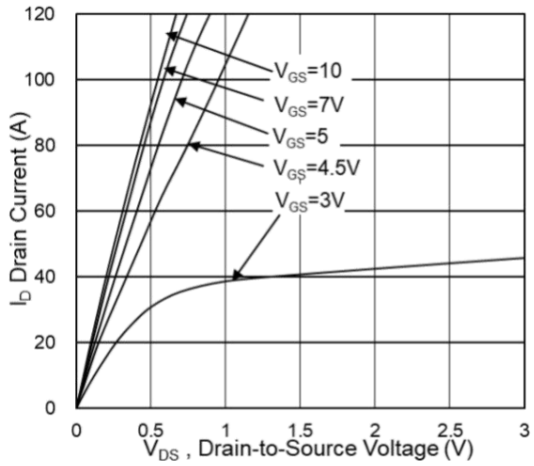

Fig.1 Typical Output Characteristics

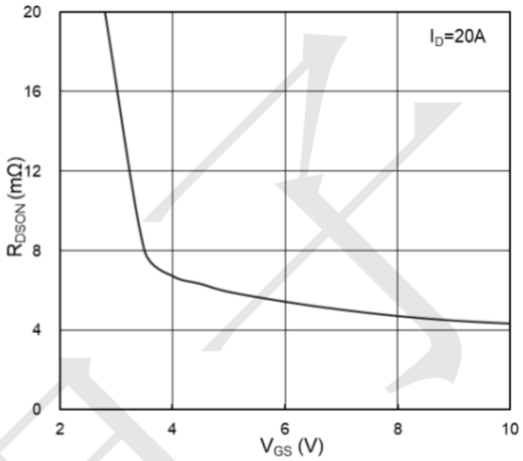

Fig.2 On-Resistance vs G-S Voltage

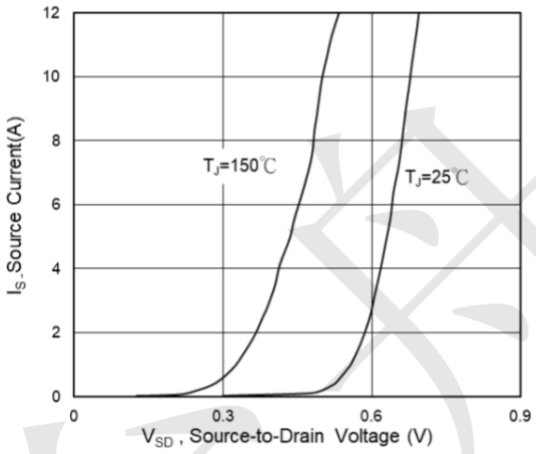

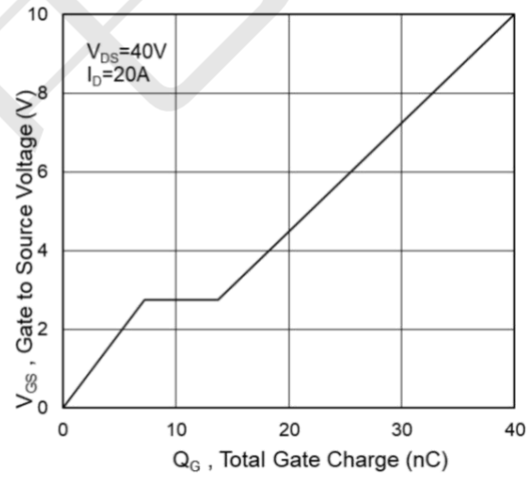

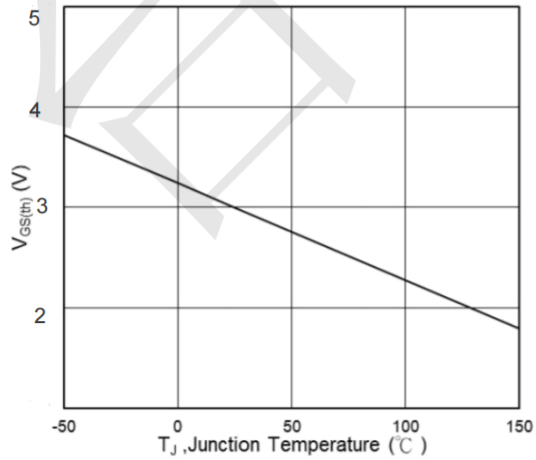

Fig.5 Normalized $V_{GS(th)}$ vs. T_J

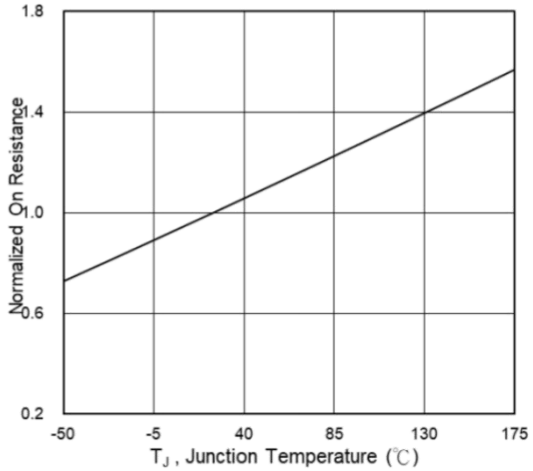

Fig.6 Normalized R_{DSON} vs. T_J

Package Information

PDFN5X6-8

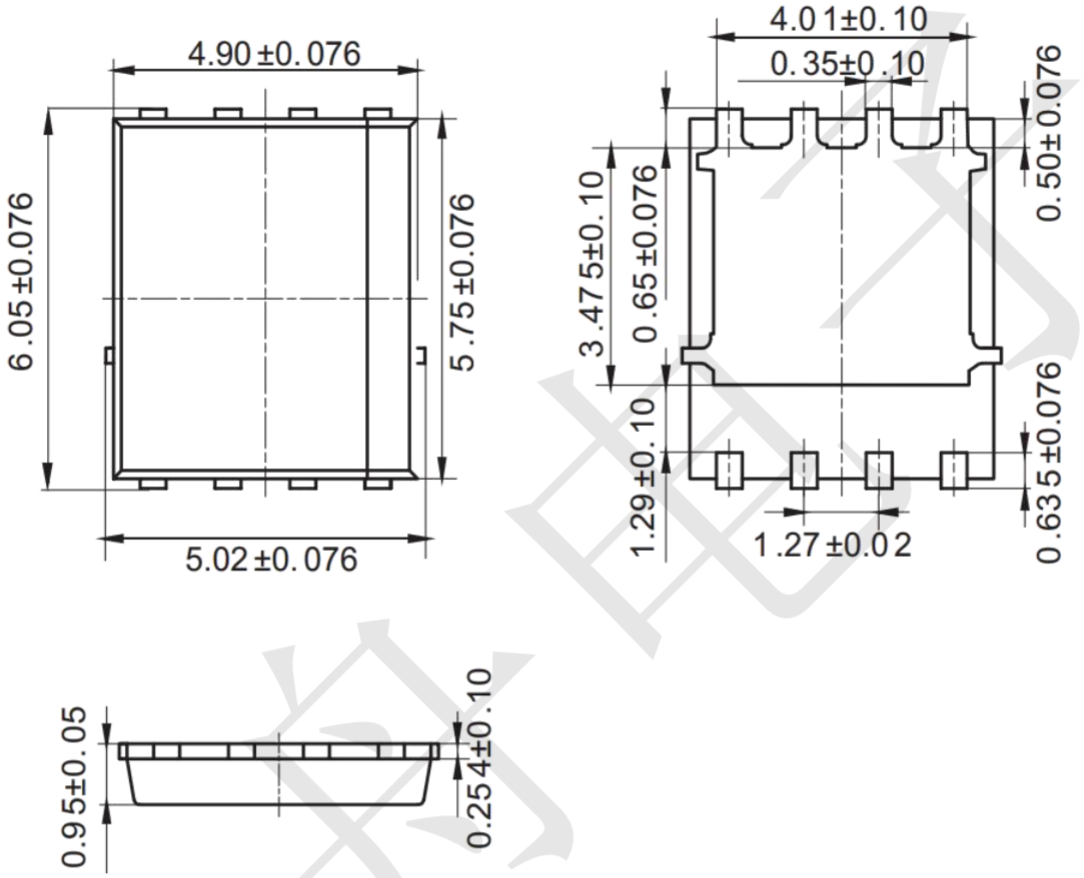

Mounting Pad Layout (unit: mm)

