TPAPX809 Series

3-Pin Microprocessor Reset Circuits

Features

- Typical Quiescent Current of 3μA
- No External Components
- V_{CC} Transient Immunity
- Correct Logic Output Guaranteed to V_{CC}=1.0V
- Push-Pull Low Active Reset Output
- Packages SOT23

Applications

- Computers
- Embedded Systems
- Battery-Powered Equipments
- Intelligent Instruments
- CPU and Logic Circuit Reset
- Power Fail Detectors
- Automotive

Pin Definition

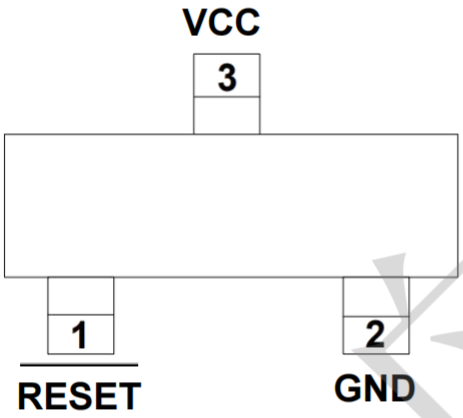

SOT23

Ordering Information

TPAPX809-46SRG

PACKAGE TYPE
SOT23

RESET VOLTAGE:
26=2.63V
29=2.93V
31=3.08V
40=4.00V
44=4.38V
46=4.63V

PIN CONFIGURATION

PIN	NAME	FUNCTION
1	$\overline{\text{RESET}}$	$\overline{\text{RESET}}$ output remains low while VCC is below the reset voltage threshold, and for a reset timeout period after VCC rises above reset threshold
2	GND	Ground
3	VCC	Supply Voltage .

Absolute Maximum Ratings (Note 1)

Symbol	Parameter	Value	UNIT
VCC	Any pin with respect to ground	-0.3 to +6.0	V
ICC	Input Current, VCC	20	mA
IO	Output Current,$\overline{\text{RESET}}$	20	mA
	Rate of Rise, VCC	100	V/μs
PD	Continuous Power Dissipation	250	mW
TA	Operating Temperature Range	-40 to +85	℃
TSTG	Storage Temperature Range	-65 to +105	℃
$R_{\theta JC}$	Thermal Resistance from Junction to Case	110	ºC/W
$R_{\theta JA}$	Thermal Resistance from Junction to Ambient	250	ºC/W

TYPICAL APPLICATIN CIRCUIT

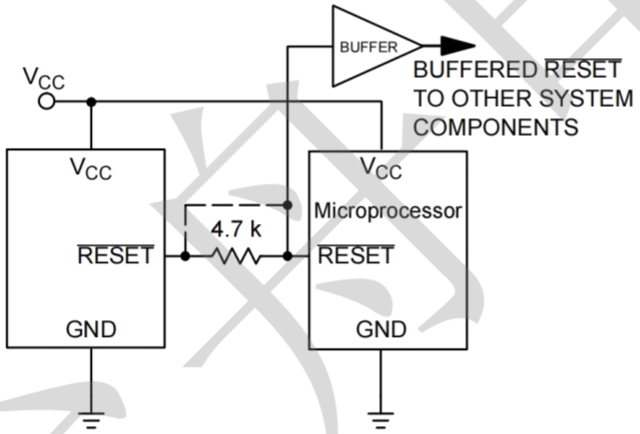

FUNCTIONAL BLOCK DIAGRAM

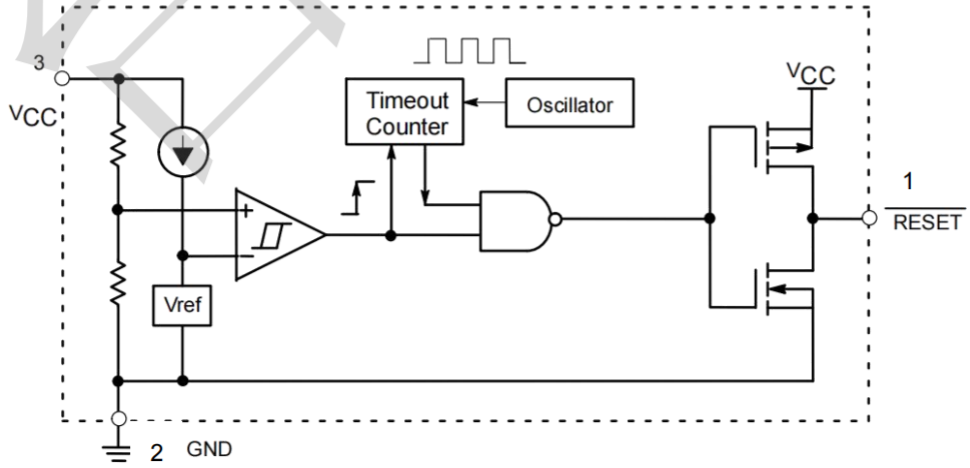

Series Complementary Active−Low Output

Electrical Characteristics

(VCC=full range, TA=-40°C to +85°C, unless otherwise noted. Typical values are at TA=+25°C, VCC=5V for L/M/J versions, VCC=3.3V for T/S versions, VCC=3V for R version, and VCC=2.5V for Z version.) Note1

Symbol	Parameter	Conditions		Min	Typ	Max	Unit
	V_{CC} Range	T_A=0°C to +70°C		1.0		5.5	V
I_{CC}	Supply Current	V_{CC}<5.5V, L/M/J			3	5	μA
		V_{CC}<3.6V, R/S/T/Z			3	5	
V_{TH}	Reset Threshold	TPAPX809-46SRG	T_A=+25°C	4.49	4.63	4.72	V
			T_A=-40°C to +85°C	4.44		4.76	
		TPAPX809-44SRG	T_A=+25°C	4.29	4.38	4.51	
			T_A=-40°C to +85°C	4.25		4.55	
		TPAPX809-40SRG	T_A=+25°C	3.90	4.00	4.10	
			T_A=-40°C to +85°C	3.86		4.14	
		TPAPX809-31SRG	T_A=+25°C	3.02	3.08	3.18	
			T_A=-40°C to +85°C	2.99		3.21	
		TPAPX809-29SRG	T_A=+25°C	2.83	2.93	2.97	
			T_A=-40°C to +85°C	2.80		3.00	
		TPAPX809-26SRG	T_A=+25°C	2.54	2.63	2.67	
			T_A=-40°C to +85°C	2.51		2.69	
Reset Threshold Tempco				--	30	--	ppm/°C
V_{CC} to Reset Delay		V_{CC}=V_{TH} to (V_{TH}–100mV)		--	10	--	μs
Reset Active Timeout Period		T_A=-40°C to +85°C		140	240	360	ms
V_{OL}	RESET Output Voltage Low (Push-Pull Active Low)	V_{CC}=V_{TH} min, I_{SINK}=1.2mA,S/T/Z		--	--	0.3	V
		V_{CC}=V_{TH} min, I_{SINK}=3.2mA,J/L/M		--	--	0.4	
		V_{CC}≤1.0V, I_{SINK}=50μA		--	--	0.3	
V_{OH}	RESET Output Voltage High (Push-Pull Active Low)	V_{CC}>V_{TH} max, I_{SOURCE}=500μA, S/T/Z		0.8V_{CC}	--	--	V
		V_{CC}>V_{TH} max, I_{SOURCE}=800μA, J/L/M		V_{CC}–1.5	--	--	

Typical Operating Characteristics

(VCC = Full range, TA = −40°C to +85°C unless otherwise noted. Typical values at TA = +25°C and VCC = 5 V for the L/M/J versions,VCC = 3.3 V for the T/S versions, VCC = 3 V for the R version and VCC = 2.5 V for the Z version.)

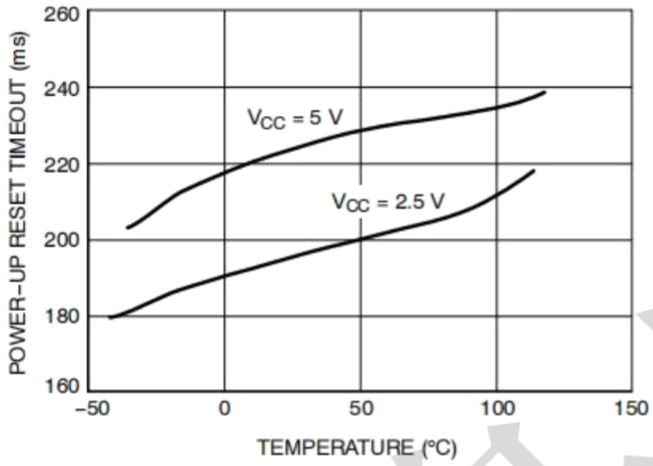

Power−Up Reset Timeout vs. Temperature

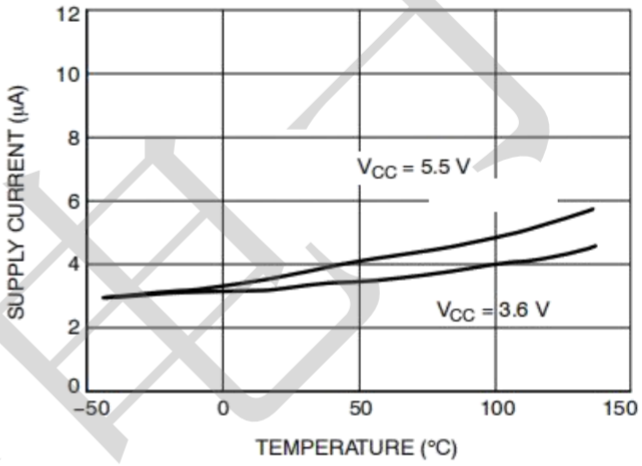

Supply Current vs. Temperature (No Load,)

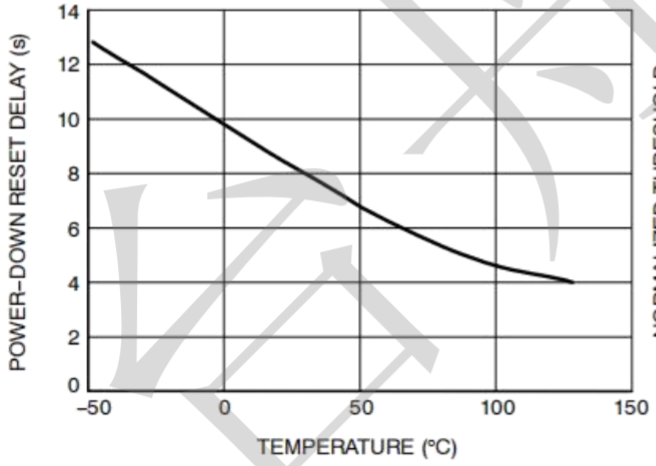

Power−Down Reset Delay vs. Temperature

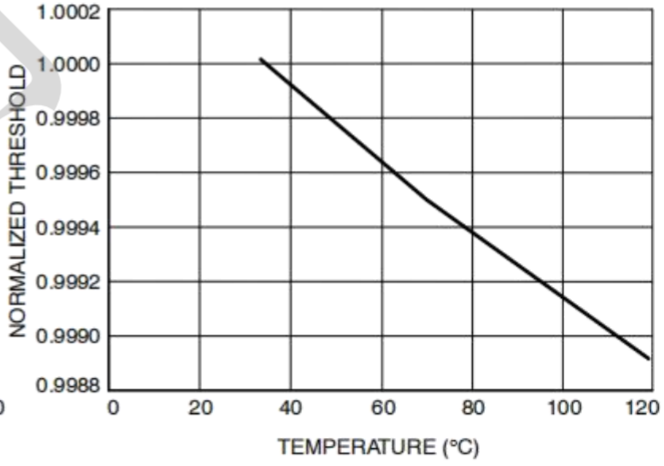

Normalized Reset Threshold vs. Temperature

Package Outline Dimensions (unit: mm)

SOT23

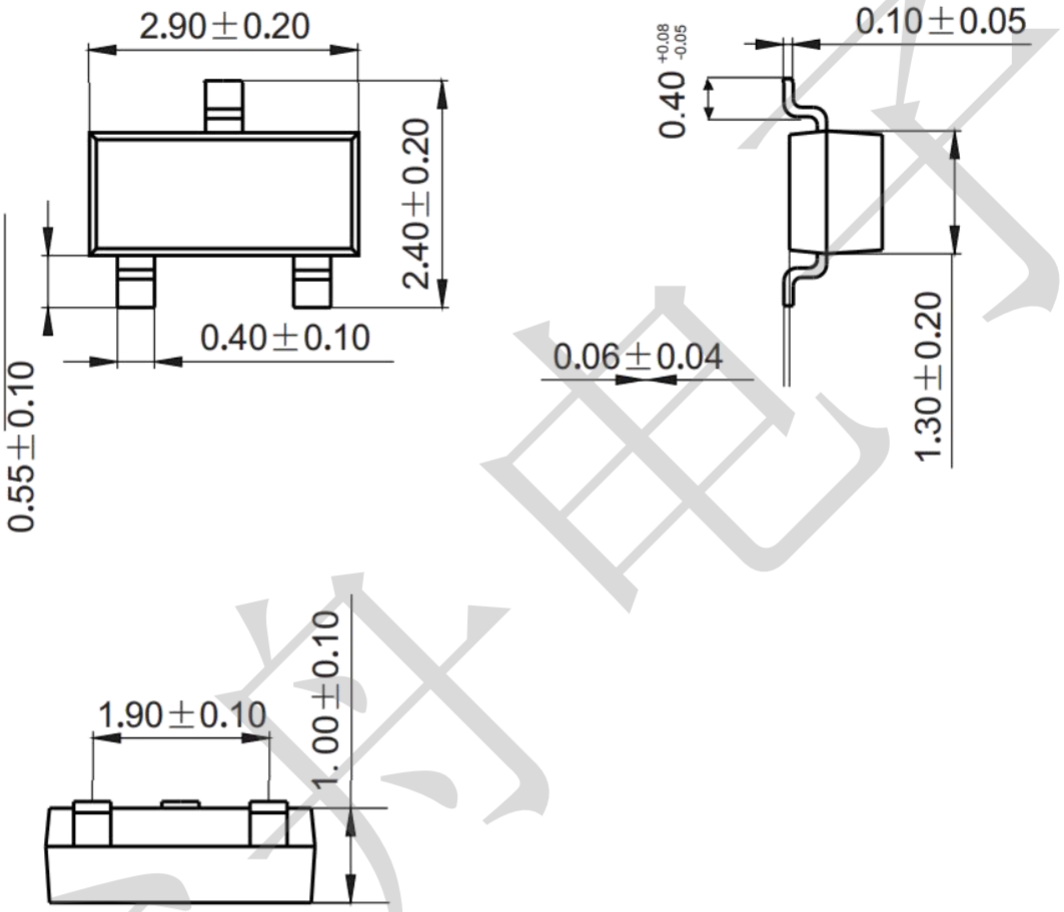

Mounting Pad Layout (unit: mm)

