TECH PUBLIC
台舟电子

CDSOD323-T04C-0603

1-Line Bi-directional ESD DIODE

WWW.TECHPUBLIC.COM

Features

- Low operating voltage: 3.3V
- Ultra low capacitance: 0.8pF（typ）
- Ultra low leakage: nA level
- Low clamping voltage
- –IEC 61000-4-2 (ESD) immunity test
  Air discharge: ±30kV
  Contact discharge: ±30kV
  –IEC61000-4-4 (EFT) 40A (5/50ns)
- 2-pin leadless package
- These are Pb−Free Devices
- Response Time is Typically < 1 ns

Mechanical Characteristics

- Package: SOD523(0603)
- Lead Finish: Matte Tin
- Case Material: “Green” Molding Compound
- Terminal Connections: See Diagram Below
- -IEC 61000-4-2 (ESD) immunity test

Applications

- Cellular Handsets and Accessories
- Personal Digital Assistants
- Notebooks and Handhelds
- Portable Instrumentation
- Peripherals

Dimensions and Pin Configuration

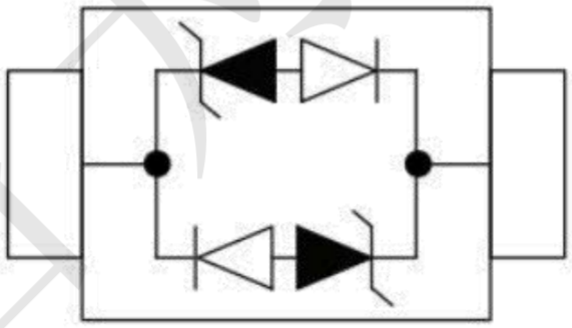

SOD523

CDSOD323-T04C-0603

1-Line Bi-directional ESD DIODE

Absolute Maximum Ratings(Tamb=25°C unless otherwise specified)

Parameter	Symbol	Value	Unit
Peak Pulse Power (8/20μs)	Ppk	310	W
IEC 61000−4−2 Spec Current at 60 ns (A)	Ipp	17	A
ESD per IEC 61000−4−2 (Air) ESD per IEC 61000−4−2 (Contact)	VESD	±30 ±30	KV
Operating Temperature Range	TJ	−55 to +125	°C
Storage Temperature Range	Tstg	−55 to +150	°C

Electrical Characteristics (TA=25°C unless otherwise specified)

Parameter	Symbol	Min	Typ	Max	Unit	Test Condition
Reverse Working Voltage	VRWM	--	--	3.3	V	
Breakdown Voltage	VBR	4.2	--	--	V	IT= 1mA
Reverse Leakage Current	IR	--	--	0.1	uA	VRWM=3.3V
Clamping Voltage	VC	--	8	--	V	Ipp=1A(8x 20us pulse)
Clamping Voltage	VC	--	--	18	V	Ipp=17A(8x 20us pulse)
Junction Capacitance	CJ	--	0.8	--	pF	VR = 0V, f = 1MHz

Symbol	Parameter
V_{RWM}	Nominal Reverse Working Voltage
I_R	Reverse Leakage Current @ V_{RWM}
V_{BR}	Reverse Breakdown Voltage @ I_T
I_T	Test Current for Reverse Breakdown
V_C	Clamping Voltage @ I_{PP}
I_{PP}	Maximum Peak Pulse Current
C_{ESD}	Parasitic Capacitance
V_R	Reverse Voltage
f	Small Signal Frequency

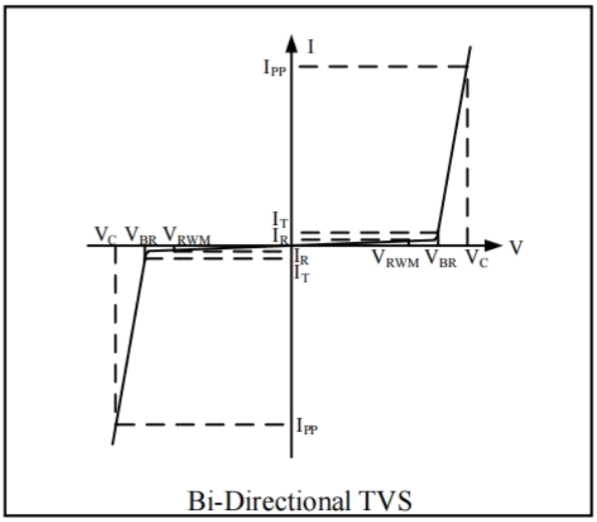

Bi-Directional TVS

Characteristic Curves

Fig1. 8/20μs Pulse Waveform

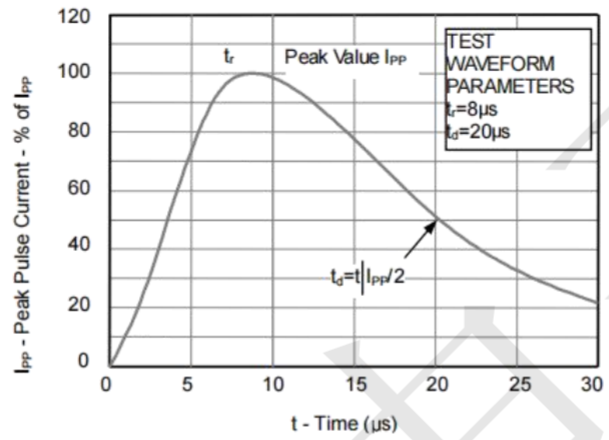

Fig2. ESD Pulse Waveform (according to IEC 61000-4-2)

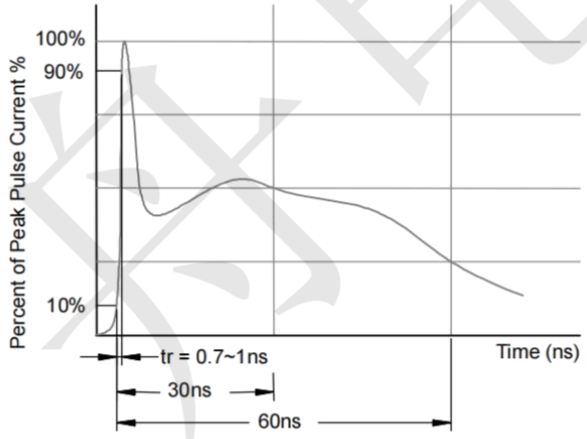

Fig3. Power Derating Curve

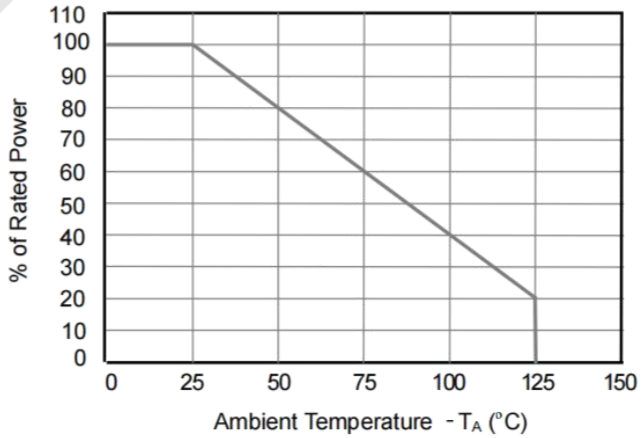

Package Outline Dimensions (unit: mm)

SOD523 (0603)

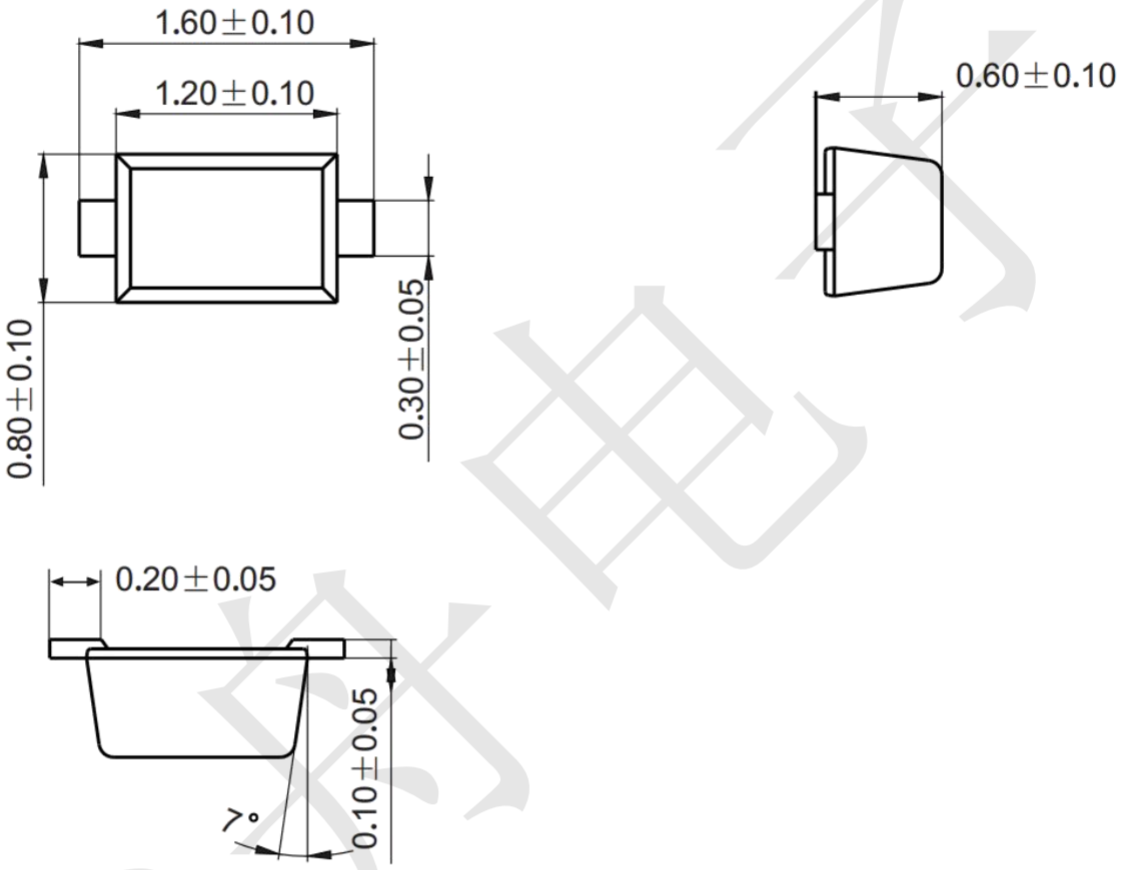

Mounting Pad Layout (unit: mm)

