

1.Base 2.Emitter 3.Collector
SOT-23 Plastic Package

Absolute Maximum Ratings (T_a = 25 °C)

Parameter	Symbol	Value	Unit
Collector Base Voltage	V_{CBO}	700	V
Collector Emitter Voltage	V_{CEO}	420	V
Emitter Base Voltage	V_{EBO}	10	V
Collector Current	I_C	150	mA
Power Dissipation	P_{tot}	300	mW
Junction Temperature	T_j	150	°C
Storage Temperature Range	T_{stg}	- 55 to + 150	°C

Characteristics at T_a = 25 °C

Parameter	Symbol	Min.	Max.	Unit
DC Current Gain at V_{CE} = 20 V, I_C = 10 mA	h_{FE}	15	25	-
Collector Base Cutoff Current at V_{CB} = 700 V	I_{CBO}	-	100	μA
Collector Emitter Cutoff Current at V_{CE} = 420 V	I_{CEO}	-	100	μA
Emitter Base Cutoff Current at V_{EB} = 10 V	I_{EBO}	-	100	μA
Collector Base Breakdown Voltage at I_C = 100 μA	$V_{(BR)CBO}$	700	-	V
Collector Emitter Breakdown Voltage at I_C = 1 mA	$V_{(BR)CEO}$	420	-	V
Emitter Base Breakdown Voltage at I_E = 100 μA	$V_{(BR)EBO}$	10	-	V
Collector Emitter Saturation Voltage at I_C = 50 mA, I_B = 10 mA	$V_{CE(sat)}$	-	1.05	V
Base Emitter Saturation Voltage at I_C = 50 mA, I_B = 10 mA	$V_{BE(sat)}$	-	1.55	V
Transition Frequency at V_{CE} = 10 V, I_C = 50 mA, f = 1 MHz	f_T	5	-	MHz
Storage Time at UI9600, I_C = 100 mA	t_s	-	3	μs
Rise Time at UI9600, I_C = 100 mA	t_r	-	1	μs
Fall Time at UI9600, I_C = 100 mA	t_f	-	1	μs

$V_{CE}(sat)$-I_C Characteristics(Typical)

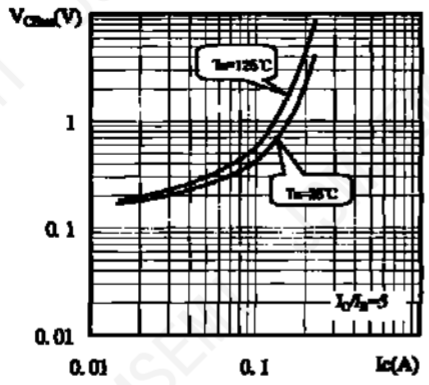

$V_{BE}(sat)$-I_C Characteristics(Typical)

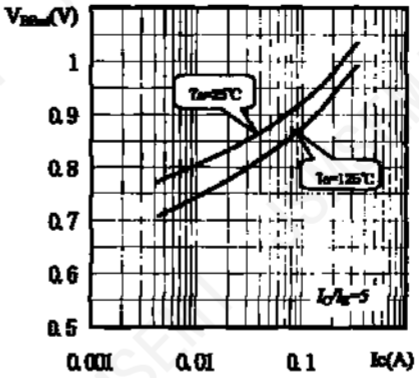

t_s-I_C Characteristics(Typical)

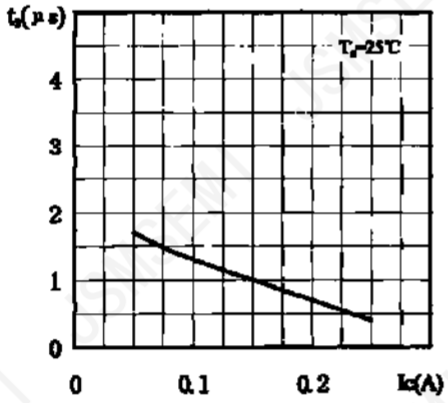

PACKAGE OUTLINE

Plastic surface mounted package; 3 leads

SOT-23

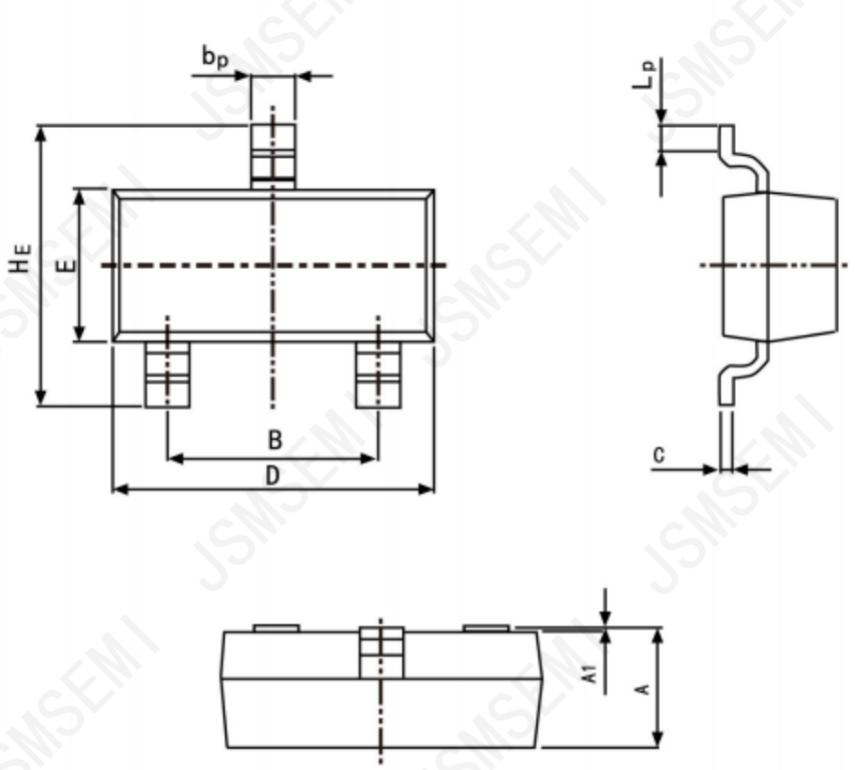

Symbol	Dimension in Millimeters	
	Min	Max
A	0.95	1.40
B	1.78	2.04
bp	0.35	0.50
C	0.08	0.19
D	2.70	3.10
E	1.20	1.65
HE	2.20	3.00
A1	0.100	0.013
Lp	0.20	0.50

Revision History

Rev.	Change	Date
V1.0	Initial version	2/23/2024

Important Notice

JSMSEMI Semiconductor (JSMSEMI) PRODUCTS ARE NEITHER DESIGNED NOR INTENDED FOR USE IN MILITARY AND/OR AEROSPACE, AUTOMOTIVE OR MEDICAL DEVICES OR SYSTEMS UNLESS THE SPECIFIC JSMSEMI PRODUCTS ARE SPECIFICALLY DESIGNATED BY JSMSEMI FOR SUCH USE. BUYERS ACKNOWLEDGE AND AGREE THAT ANY SUCH USE OF JSMSEMI PRODUCTS WHICH JSMSEMI HAS NOT DESIGNATED FOR USE IN MILITARY AND/OR AEROSPACE, AUTOMOTIVE OR MEDICAL DEVICES OR SYSTEMS IS SOLELY AT THE BUYER’S RISK.

JSMSEMI assumes no liability for application assistance or customer product design. Customers are responsible for their products and applications using JSMSEMI products.

Resale of JSMSEMI products or services with statements diferent from or beyond the parameters stated by JSMSEMI for that product or service voids all express and any implied warranties for the associated JSMSEMI product or s ervice. JSMSEMI is not responsible or liable for any such statements.

JSMSEMI All Rights Reserved. Information and data in this document are owned by JSMSEMI wholly and may not be edited, reproduced, or redistributed in any way without the express written consent from JSMSEMI.

Any and all information described or contained herein are subject to change without notice due to product/technology improvement, etc.When designing equipment, refer to the "Delivery Specification" for the JSMSEMI product that you intend to use.

For additional information please contact Kevin@jsmsemi.com or visit www.jsmsemi.com